

SIGMA 16
SIGMA 16 PRO

BOOST YOUR PRODUCTIVITY

> Best working envelope in the market with the longest outreach and highest up & over clearance
> Simultaneous movements
> Versatility indoor & outdoor on firm ground
> Load capacity of 230 kg & two operators

MOVE WITH AGILITY

> Jib with horizontal rotation provides access to the most inaccessible places (PRO model)
> Zero tailswing and tight turning radius
> Proportional, precise & smooth movements

RELIABLE SERVICEABILITY

> Haulotte Activ'Energy Management takes care of your battery
> Haulotte Activ'Screen: on-board configuration & diagnostic interface

WORK SAFELY

> Haulotte Activ'Shield Bar *
> Haulotte Activ'Lighting System *

* Optional on **SIGMA 16** model

SIGMA 16
SIGMA 16 PRO

ELECTRIC ARTICULATING BOOMS

TECHNICAL DATA

	SIGMA 16	SIGMA 16 PRO
Working height	16.1 m	15.7 m
Platform height	14.1 m	13.7 m
Horizontal outreach	8.35 m	8.05 m
Up and over clearance	7.4 m	
Lift capacity	230 kg (2 pers.)	
A Length	6.6 m	6.65 m
B Width	1.75 m	
C Wheelbase	2 m	
D Ground clearance	17 cm	
E x F Platform size	1.2 x 0.8 m	
Height - stowed	2 m	
A Storage / transport length	6.6 m	6.65 m
Tailswing	0 cm	
Vertical jib rotation	-65° /+65°	
Horizontal jib rotation	N/A	-55° /+55°
Platform rotation	-85° /+85°	
Turntable rotation	355 °	
Tilt	4°/4°	
Proportional drive speed	5 km/h	
Maximum wind speed rating	45 km/h	
Gradeability	25 %	
Turning radius - outside	3.9 m	
Tyres - non marking	676 x 231 mm	
Weight	6 900 kg	6 950 kg
Batteries	8 x 6 V - 435 Ah (C20)	

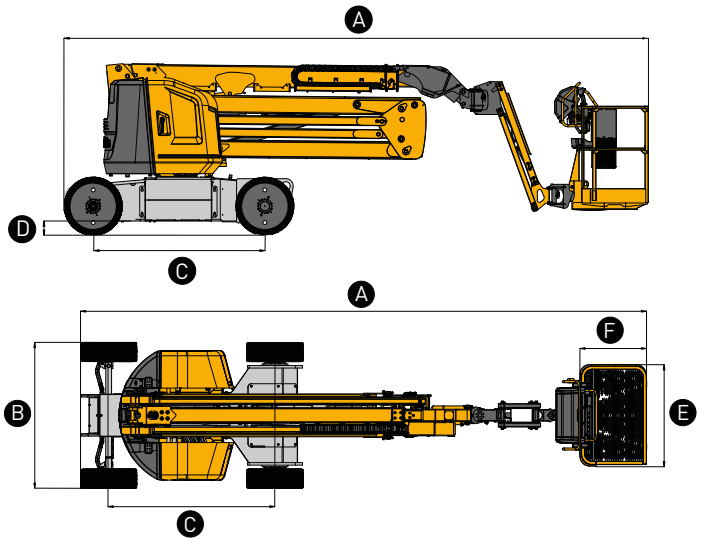

STANDARD EQUIPMENTS

> Jib with horizontal rotation (PRO model)
> 2 wheel drive / 2 wheel steer
> AC motors
> 48V battery pack
> Haulotte Activ'Energy Management: smart battery management system
> Haulotte Activ'Shield Bar 2.0 *
> Haulotte Activ'Lighting System for safe loading in low visibility conditions *
> Haulotte Activ'Screen: embedded diagnostic system, with color screen
> Upper control box cover *
> Tool tray *
> 1.2 m wide basket
> Drop bar entry
> Large solid, non-marking industrial tires
> AC power to basket
> Lockable battery circuit breaker
> Motion alarm

OPTIONS AND ACCESSORIES

> Side swing door + front drop bar
> 1.5 m basket
> Cones holder
> Fluorescent tube holder
> Basket plug (110 / 230 V)
> Cold countries hydraulic oil
> Haulotte Activ'Energy Management: manual or automatic battery water-filling system
> USB plug
> Telematics solutions

* Optional on **SIGMA 16** model

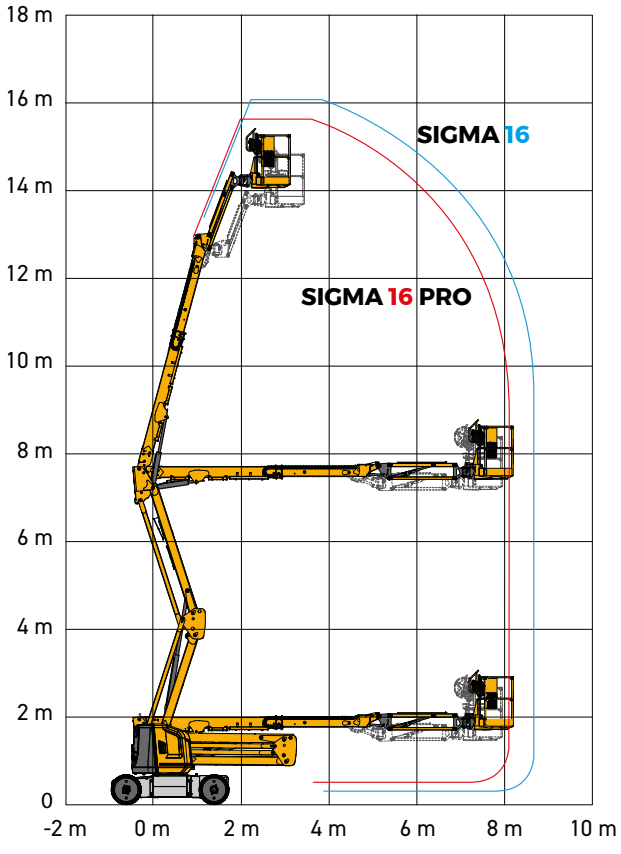

4001139350 · Non contractual document · We reserve the right to modify the technical characteristics of this document without notice · 12/2020

Rue Emile Zola - 42420 Lorette - France · Tel: +33 (0)4 77 29 24 24 · Fax: +33 (0)4 77 29 43 95 ·
haulotte@haulotte.com · **www.haulotte.com**

Haulotte
LET'S DARE TOGETHER