Copyright in bezit van S.G.B. Group p.l.c. Mitcham, Surrey. Vermenigvuldiging of mededeling aan derden in welke vorm dan ook, is zonder schriftelijke toestemming van eigenaars niet geoorloofd.

Copyright est la propriété de S.G.B. Group p.l.c. Mitcham, Surrey. La reproduction ou la communication à des tiers, sous quelque forme que ce soit n'est permise qu'avec l'autorisation écrite du propriétaire.

Copyright ist Eigentum der S.G.B. Group p.l.c. Mitcham, Surrey. Vervielfältigung oder Bekanntgabe an Dritte, in welcher Form auch, ohne schriftliche Genehmigung der Eigentümerin nicht gestattet.

Copyright owned by S.G.B. Group p.l.c. Mitcham, Surrey. Reproduction or disclosure to third parties in any form whatsoever is not allowed without the written consent of the proprietors. ©Copyright S.G.B. Group p.l.c. 19

Page	Content
1-2	Soldier Units
3- 9	Ancillary Components
17	Schedule of Nuts & Bolts
18	Schedule of Height Make Ups
19	Extension Arrangements
20- 26	Use of Ancillary Components
30- 35	Assembly of Wall Forms
40-54	Soldier Centres & Tie Load Tables
60	Introduction to the Shoring System
61-65	Ancillary Components (Shoring System)
70-74	Use of Ancillary Components (Shoring System)
80-85	Schedule of Height Make Ups (Shoring System)
90-92	Loading Data (Shoring System)
93-96	Methods of Lacing & Bracing (Shoring System)

SGB GROUP p.l.c.
WILLOW LANE MITCHAM
SURREY Tel. 01-648 3400

MK II STEEL SOLDIER SYSTEM

SOLDIER UNITS

Ref No. J29
Page No. 1
Date January 1984
GROUP RESEARCH AND DEVELOPMENT DIVISION

Permissible Tieload = 115 kN.
Permissible B.M. = 38 kN.m.
Permissible B.M. at joint = 10 kN.m.
E.I. (for deflection calc. purposes) = 3250 kN.m²

Soldier 3.6m
Code No: 4430/06
Weight: 70.97 kg.

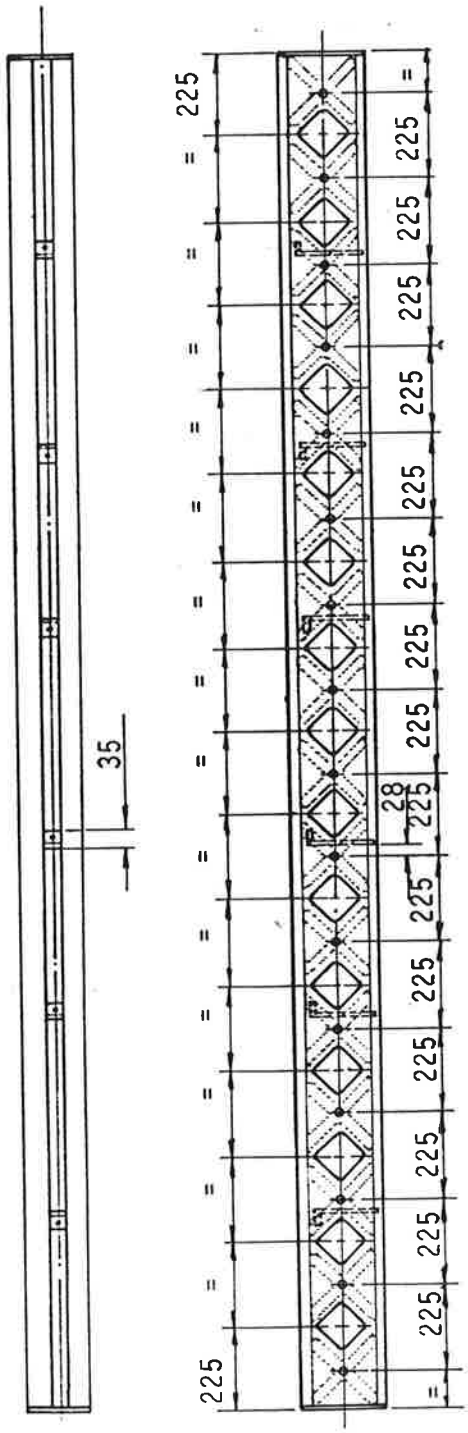

Soldier 3.15m
Code No: 4430/05
Weight: 62.58 kg.

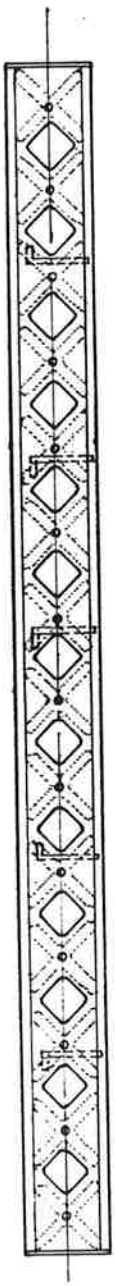

Soldier 2.7m
Code No: 4430/04
Weight: 54.2 kg

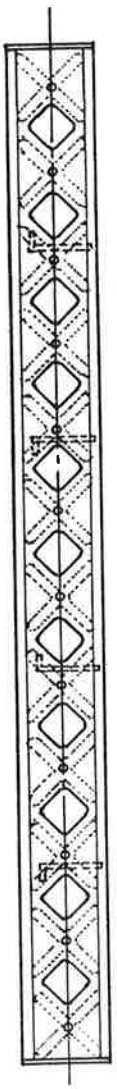

Copyright owned by S.G.B. Group P.L.C. Mitcham, Surrey. Reproduction or disclosure to third parties in any form whatsoever is not allowed without the written consent of the proprietors. © Copyright S.G.B. Group P.L.C. 1983

Copyright ist Eigentum der S.G.B. P.L.C. Mitcham, Surrey. Vervielfältigung oder Bekanntgabe an Dritte, in welcher Form auch, ohne schriftliche Genehmigung der Eigentümerin nicht gestattet.

Copyright est la propriété de S.G.B. Group P.L.C. Mitcham, Surrey. La reproduction ou la communication à des tiers, sous quelque forme que ce soit n'est permise qu'avec l'autorisation écrite du propriétaire.

Copyright in bezit van S.G.B. Group P.L.C. Mitcham, Surrey. Vermenigvuldiging of mededeling aan derden in welke vorm dan ook, is zonder schriftelijke toestemming van eigenares niet geoorloofd.

SGB GROUP p.l.c.
WILLOW LANE MITCHAM
SURREY Tel. 01-648 3400

MK II STEEL SOLDIER SYSTEM

SOLDIER UNITS

Ref No. J29
Page No. 2
Date January 1984
GROUP RESEARCH AND DEVELOPMENT DIVISION

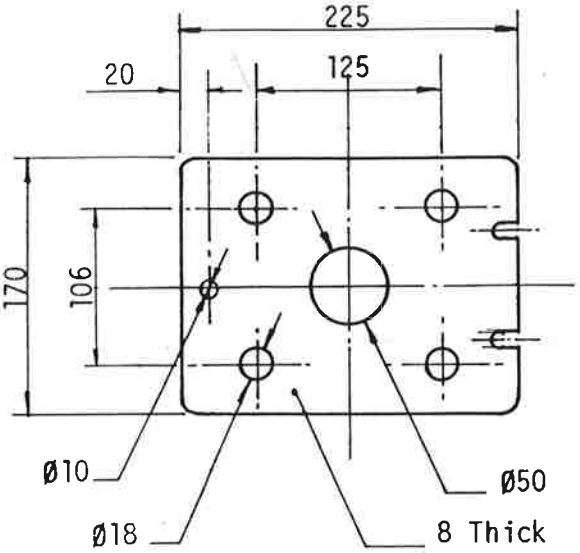

View on End Plate

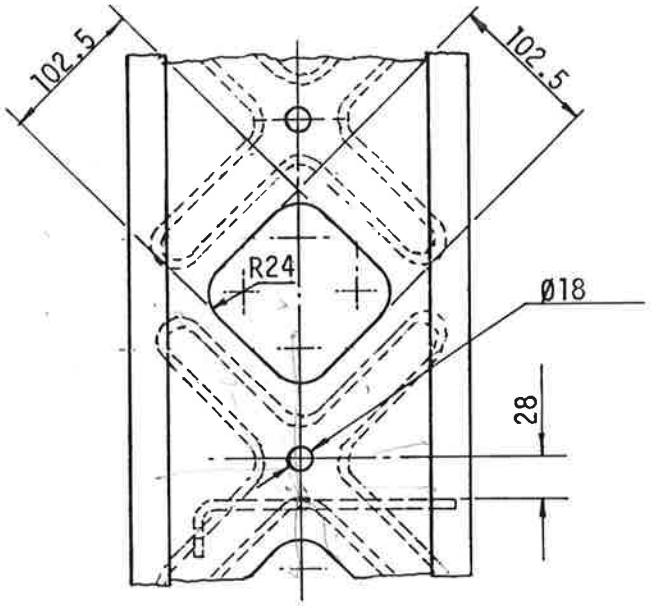

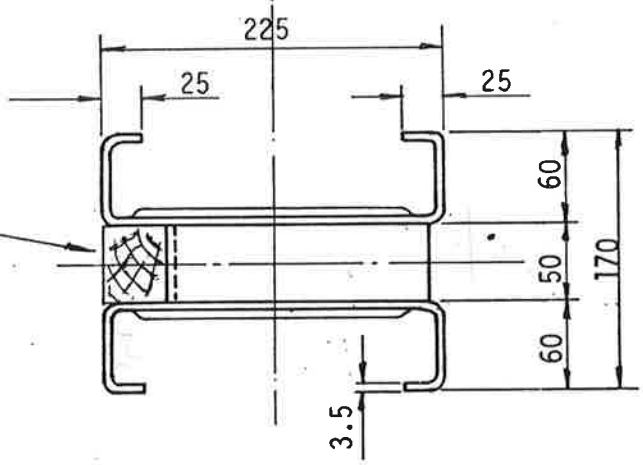

40 x 50 Timber may be inserted and can be fixed to cross braces with M10 x 50 90° Countersunk square hexagon (bolt & nuts) and to end plate through Ø10 hole with 20 gauge x 38mm wood screws. Timber, Bolts and Screws NOT SUPPLIED

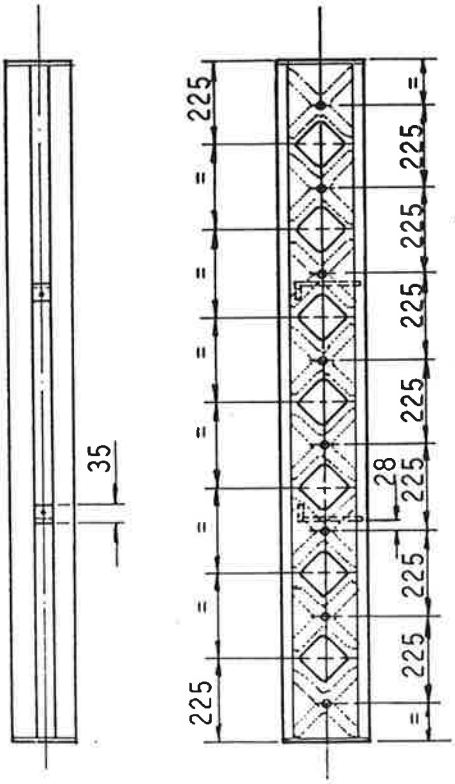

Soldier 1.8m
Code No: 4430/03
Weight: 37.42 kg

Soldier 1.125m
Code No: 4430/02
Weight: 25.43 kg

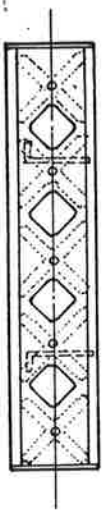

Soldier 0.9m
Code No: 4430/01
Weight: 21.43 kg

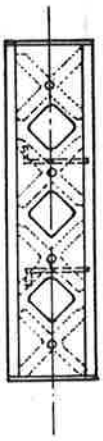

Copyright owned by S.G.B. Group P.L.C. Mitcham, Surrey. Reproduction or disclosure to third parties in any form whatsoever is not allowed without the written consent of the proprietors. © Copyright S.G.B. Group P.L.C. 1983

Copyright est la propriété de S.G.B. Group P.L.C. Mitcham, Surrey. La reproduction ou la communication à des tiers, sous quelque forme que ce soit n'est permise qu'avec l'autorisation écrite du propriétaire.

Copyright ist eigentum S.G.B. P.L.C. Mitcham, Surrey. Vervielfältigung oder Bekanntgabe an Dritte, in welcher Form auch, ohne schriftliche Genehmigung der Eigentümerin nicht gestattet.

Copyright in bezit van S.G.B. Group P.L.C. Mitcham, Surrey. Vermenigvuldiging of mededeling aan derden in welke vorm dan ook, is zonder schriftelijke toestemming van eigenares niet geoorloofd.

SGB GROUP p.l.c.
WILLOW LANE MITCHAM
SURREY Tel. 01-648 3400

MK II STEEL SOLDIER SYSTEM

DETAILS OF ANCILLARY COMPONENTS

GROUP RESEARCH AND DEVELOPMENT DIVISION

Lifting Bracket

Code No: 4430/15
Weight: 2.8 Kg.

There are normally 2 Lifting Brackets Minimum per form unit .
(see also page 22)

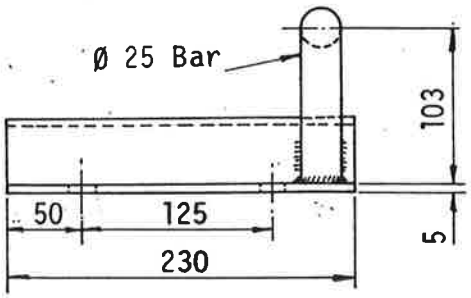

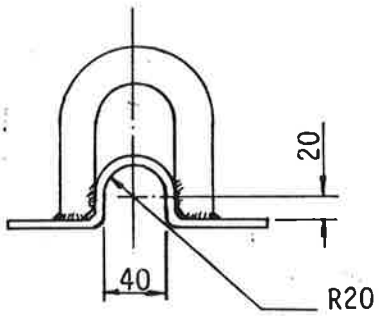

Hop-up Bracket

Code No: 4430/17
Weight: 5.6 Kg.
(see also page 21)

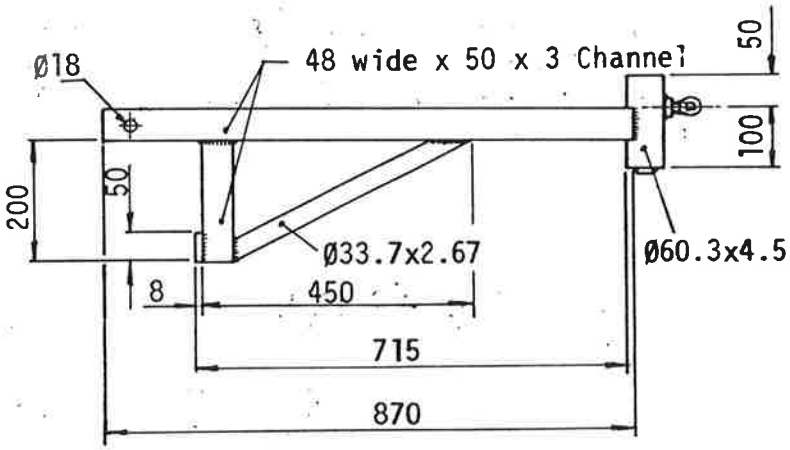

Support Plate

Code No: 4430/19
Weight: 3.82 Kg.
(see also page 21)

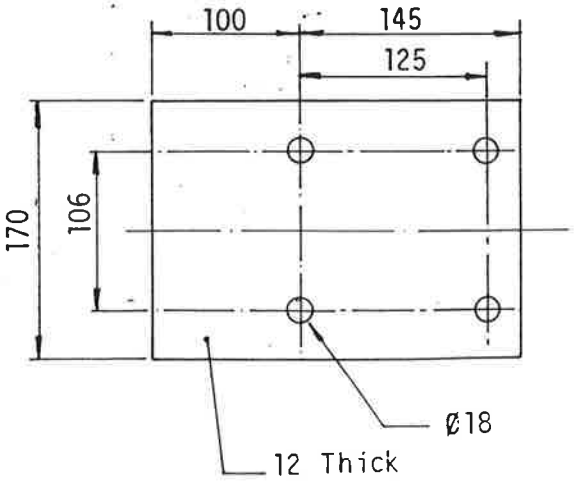

Copyright owned by S.G.B. Group p.l.c. Mitcham, Surrey. Reproduction or disclosure to third parties in any form whatsoever is not allowed without the written consent of the proprietors. © Copyright S.G.B. Group p.l.c 1983

Copyright ist Eigentum der S.G.B. p.l.c. Mitcham, Surrey. Vervielfältigung oder Bekanntgabe an Dritte, in welcher Form auch, ohne schriftliche Genehmigung der Eigentümerin nicht gestattet.

Copyright est la propriété de S.G.B. Group p.l.c. Mitcham, Surrey. La reproduction ou la communication à des tiers, sous quelque forme que ce soit n'est permise qu'avec l'autorisation écrite du propriétaire.

Copyright in bezit van S.G.B. Group p.l.c. Mitcham, Surrey. Vermenigvuldiging of mededeling aan derden in welke vorm den ook, is zonder schriftelijke toestemming van eigenares niet geoorloofd.

SGB GROUP p.l.c.
WILLOW LANE MITCHAM
SURREY Tel. 01-648 3400

MK II STEEL SOLDIER SYSTEM

DETAILS OF ANCILLARY COMPONENTS

Ref No. J29
Page No. 4
Date April 1984

GROUP RESEARCH AND DEVELOPMENT DIVISION

Stabiliser Unit

Code No: 4430/21
Weight: 21.5 kg

MAX. S.W.L. IN STRUT 15 kN

Note:

This stabiliser unit cannot be used on shutters using two or more soldiers where the bottom soldier is 1.8m.
(See also pages 32, 33, & 34.)

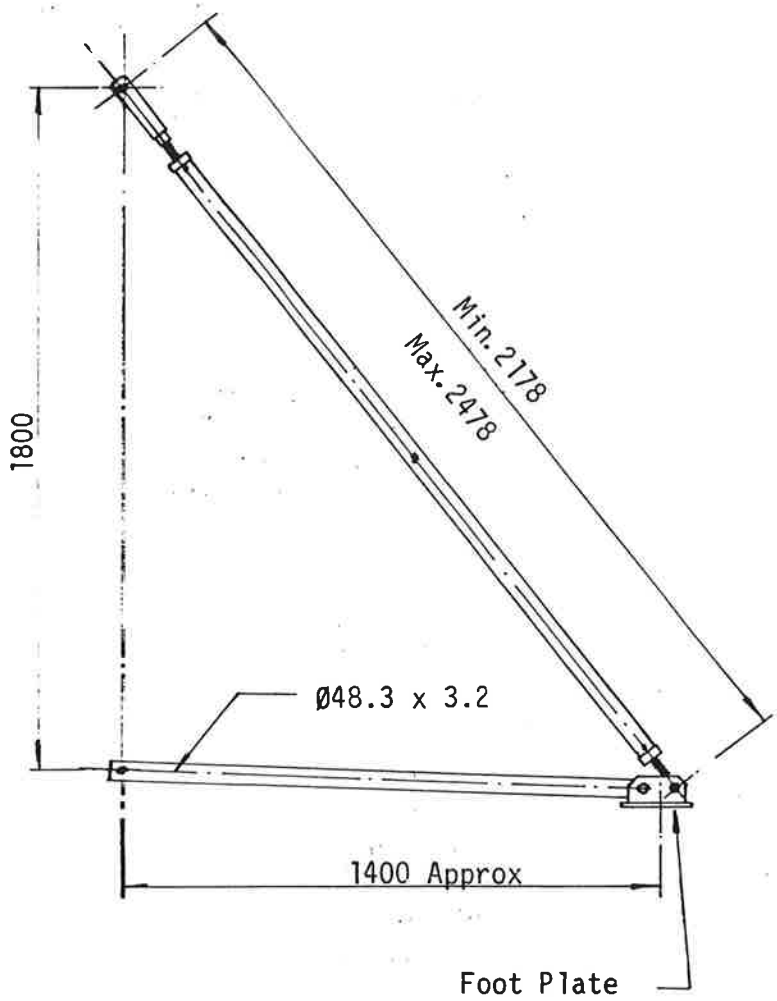

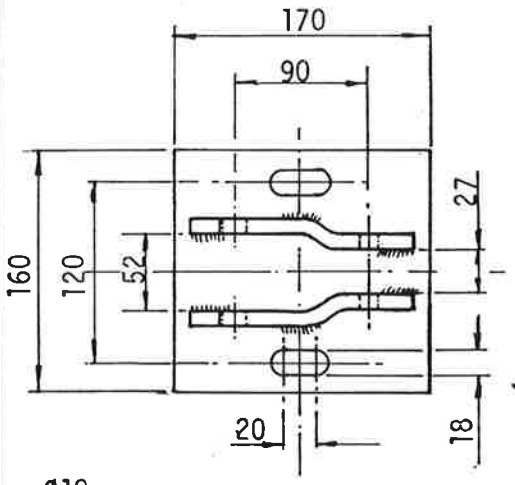

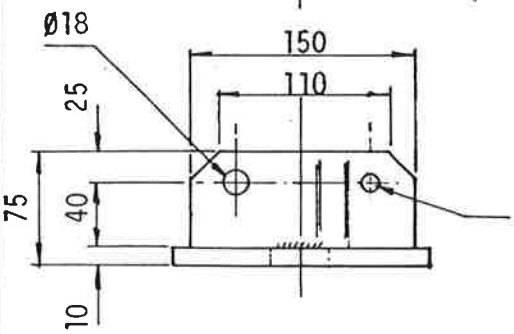

Details of Foot Plate

Standard Push Pull Prop Adaptor

Code No: 4233/06
Weight: 0.82 kg.

(See also page 23)

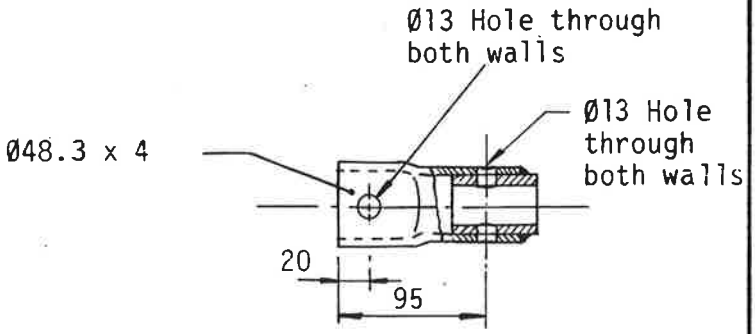

Copyright in bezit van S.G.B. Group P/C. Mitcham, Surrey. Vermenigvuldiging of mededeling aan derden in welke vorm dan ook, is zonder schriftelijke toestemming van eigenares niet geoorloofd.
Copyright est la propriété de S.G.B. Group P/C. Mitcham, Surrey. La reproduction ou la communication à des tiers, sous quelque forme que ce soit n'est permise qu'avec l'autorisation écrite du propriétaire.
Copyright ist Eigentum der S.G.B. P/C. Mitcham, Surrey. Vervielfältigung oder Bekanntgabe an Dritte, in welcher Form auch, ohne schriftliche Genehmigung der Eigentümerin nicht gestattet.
Copyright owned by S.G.B. Group P/C. Mitcham, Surrey. Reproduction or disclosure to third parties in any form whatsoever is not allowed without the written consent of the proprietors. © Copyright S.G.B. Group P/C. 1983

SGB GROUP p.l.c.
WILLOW LANE MITCHAM
SURREY Tel. 01-648 3400

MK II STEEL SOLDIER SYSTEM

DETAILS OF ANCILLARY COMPONENTS

GROUP RESEARCH AND DEVELOPMENT DIVISION

Form Jack

Code No: 4430/16
Weight: 4.9 Kg

If Form Jacks are required, they can be fitted to the bottom of the soldier using 2 No. M16 x 45 set screws and nuts. A minimum of 2 Form Jacks per unit are required.

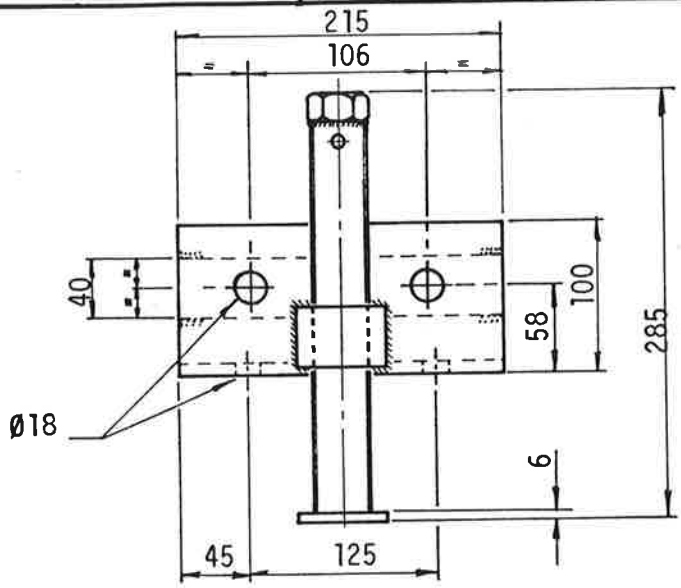

Form Jacks may also be used as a plumbing device on climbing shutters.
(For details see page 22)

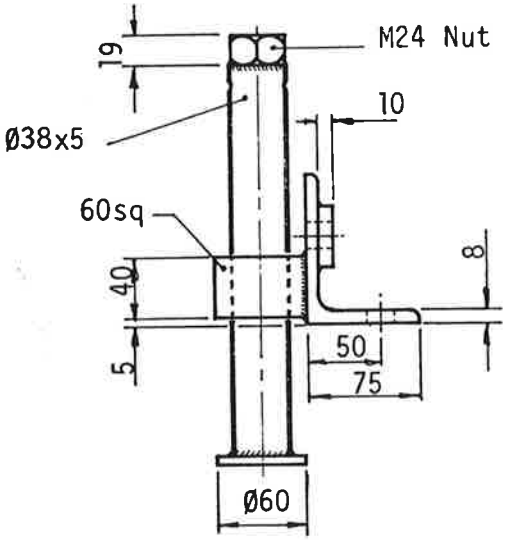

Forkhead

Code No: 1192
Weight: 5.2 Kg

The forkhead is wide enough to accept a Mk II Soldier.

The Ø48.3 x 4 Socket will accept a Ø38 Jack.

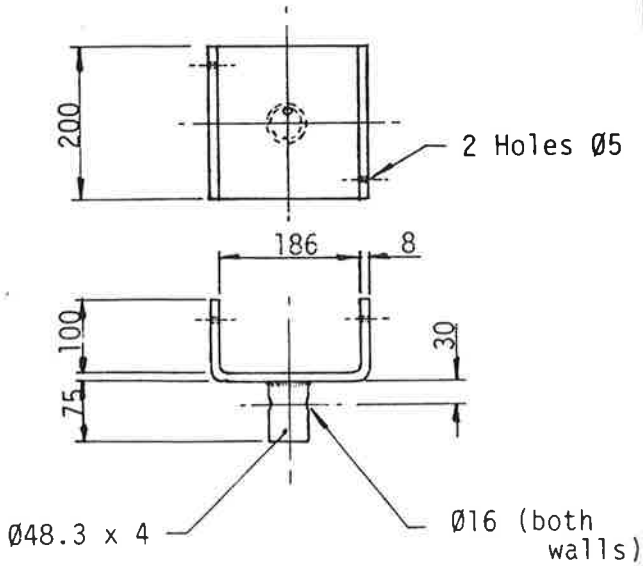

Copyright owned G.B.G. PLC, Mitcham, Surrey. Reproduction or disclosure to third parties in any form whatsoever is not allowed without the written consent of the proprietors. © Copyright S.G.B. Group PLC 1983

Copyright est la propriété de S.G.B. PLC, Mitcham, Surrey. La reproduction ou la communication à des tiers, sous quelque forme que ce soit n'est permise qu'avec l'autorisation écrite du propriétaire.

Copyright Eigentum S.G.B. PLC, Mitcham, Surrey. Vervielfältigung oder Bekanntgabe an Dritte, in welcher Form auch, ohne schriftliche Genehmigung der Eigentümerin nicht gestattet.

Copyright bezit van S.G.B. Group PLC, Mitcham, Surrey. Vermenigvuldiging of mededeling aan derden in welke vorm dan ook, is zonder schriftelijke toestemming van eigenares niet geoorloofd.

SGB GROUP p.l.c.
WILLOW LANE MITCHAM
SURREY Tel. 01-648 3400

MK II STEEL SOLDIER SYSTEM

DETAILS OF
ANCILLARY COMPONENTS

Ref No. J29
Page No. 6
Date July 1984

GROUP RESEARCH AND
DEVELOPMENT DIVISION

Waling Clip

Code No: 4455/00
Weight: 0.8 kg.

Used for fixing a scaffold tube to the back of the soldier. For alignment or bracing.

This item is also used on the Metriform System



Timber Waling Clamp

Code No: 4431/23
Weight: 0.34 kg.

(See also page 20)

This item is also used on the J4 Soldier System.

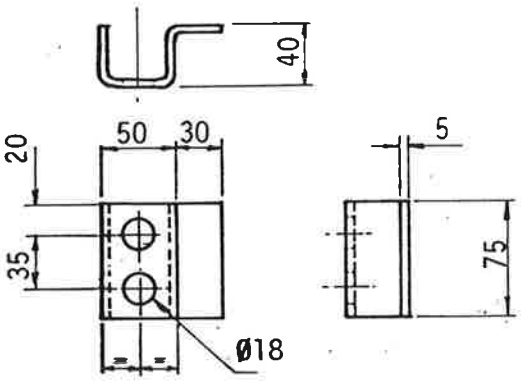

J. Bolt

Code No: 4431/24
Weight: 0.45 kg.

(See also page 20)

This item is also used on the J4 Soldier System

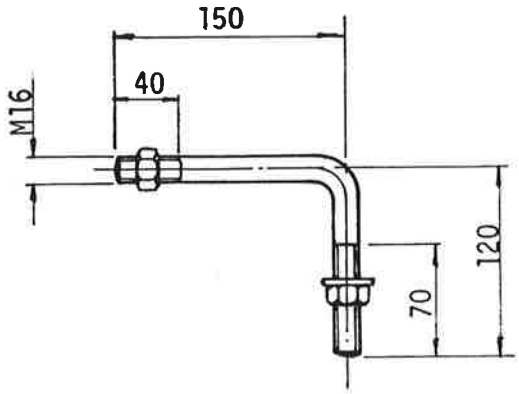

Coach Screw

M12 x 75 and M12 Washer

(See also page 20)



Copyright owned by S.G.B. Group p.l.c. Mitcham, Surrey. Reproduction or disclosure to third parties in any form whatsoever is not allowed without the written consent of the proprietors. © Copyright S.G.B. Group p.l.c 1983
Copyright est la propriété de S.G.B. Group p.l.c., Mitcham, Surrey. La reproduction ou la communication à des tiers, sous quelque forme que ce soit n'est permise qu'avec l'autorisation écrite du propriétaire.
Copyright ist Eigentum der S.G.B. p.l.c., Mitcham, Surrey. Vervielfältigung oder Bekanntgabe an Dritte, in welcher Form auch, ohne schriftliche Genehmigung der Eigentümerin nicht gestattet.
Copyright in bezit van S.G.B. Group p.l.c., Mitcham, Surrey. Vermenigvuldiging of mededeling aan derden in welke vorm dan ook, is zonder schriftelijke toestemming van eigenares niet geoorloofd.

SGB GROUP p.l.c.
WILLOW LANE MITCHAM
SURREY Tel. 01-648 3400

MK II STEEL SOLDIER SYSTEM

DETAILS OF ANCILLARY COMPONENTS

GROUP RESEARCH AND DEVELOPMENT DIVISION

Mk II Universal Clamp

Code No: 4430/36
Weight: 0.6 kg.

Used to secure Dual Walings to Soldier.
The additional feature of the Mk II Clamp, is that it may be used for fixing Mk II Soldiers at right angles see page 24.
The Universal Clamp Mk II will supersede the Universal Clamp (Mk I) Code No. 717/90 (Ref. K14).

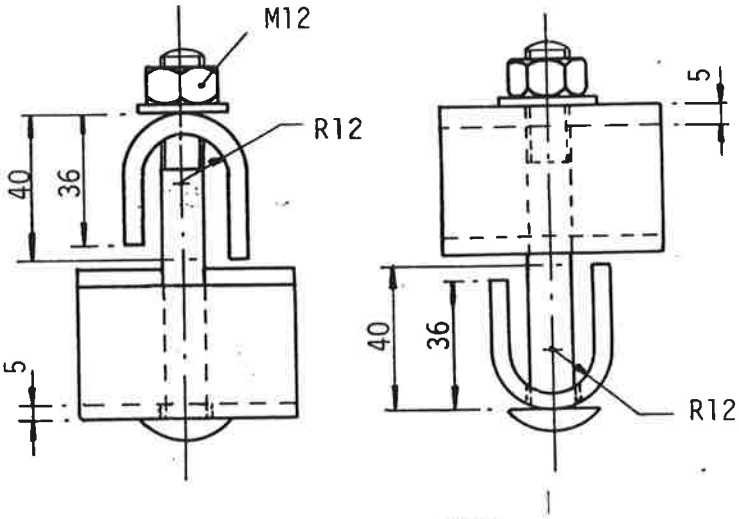

The Mk II Universal Clamp will be replaced with the design as shown on the right. Both the name and code number will remain the same.

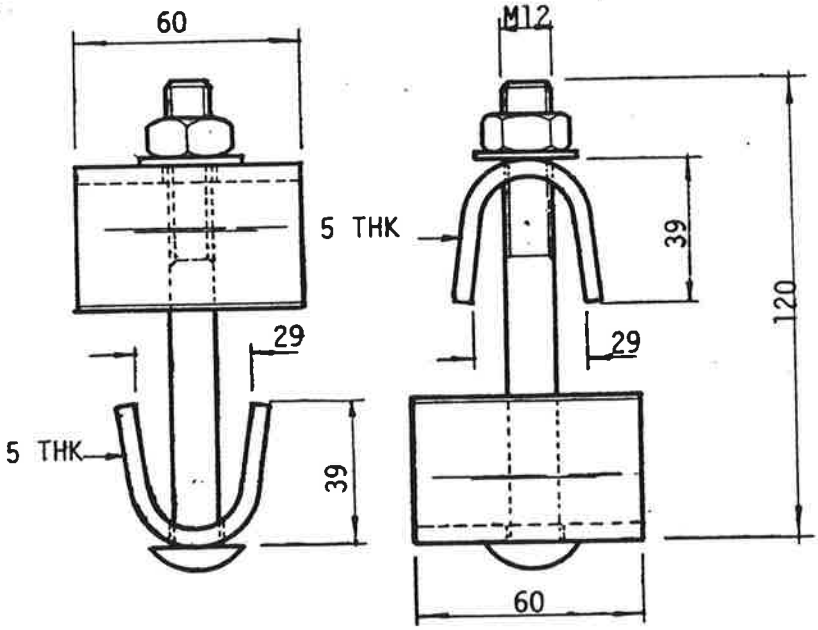

Copyright owned by S.G.B. Group p.l.c. Mitcham, Surrey. Reproduction or disclosure to third parties in any form whatsoever is not allowed without the written consent of the proprietors. © Copyright S.G.B. Group p.l.c. 19

Copyright ist Eigentum der S.G.B. Group p.l.c. Mitcham, Surrey. Vervielfältigung oder Bekanntgabe an Dritte, in welcher Form auch, ohne schriftliche Genehmigung der Eigentümerin nicht gestattet.

Copyright est la propriété de S.G.B. Group p.l.c. Mitcham, Surrey. La reproduction ou la communication à des tiers, sous quelque forme que ce soit n'est permise qu'avec l'autorisation écrite du propriétaire.

Copyright in bezit van S.G.B. Group p.l.c. Mitcham, Surrey. Vermenigvuldiging of mededeling aan derden in welke vorm dan ook, is zonder schriftelijke toestemming van eigenares niet geoorloofd.

SGB GROUP p.l.c.
WILLOW LANE MITCHAM
SURREY Tel. 01-648 3400

MK II STEEL SOLDIER SYSTEM

DETAILS OF ANCILLARY COMPONENTS

GROUP RESEARCH AND DEVELOPMENT DIVISION

Clamp-Metriform Panel
to Mk II Soldier

Code:No: 4430/39
Weight: 0.25 kg

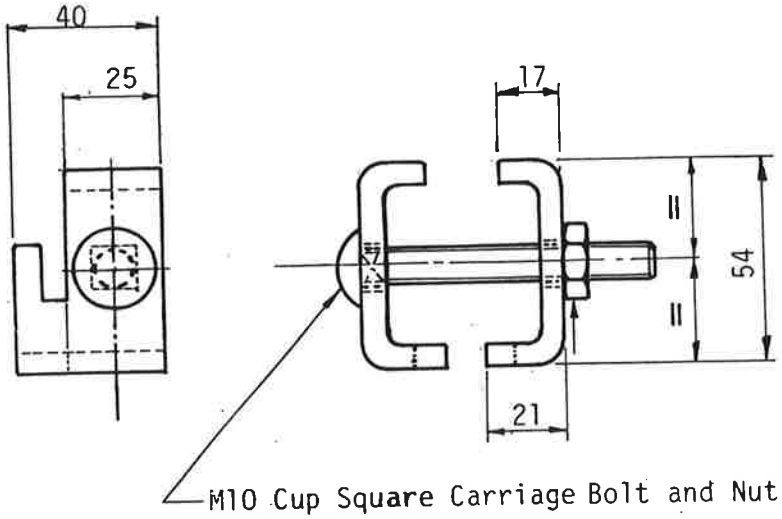

Copyright owned by S.G.B. Group p.l.c. Mitcham, Surrey. Reproduction or disclosure to third parties in any form whatsoever is not allowed without the written consent of the proprietors. ©Copyright S.G.B. Group p.l.c. 19

Copyright ist Eigentum der S.G.B. Group p.l.c. Mitcham, Surrey. Vervielfältigung oder Bekanntgabe an Dritte, in welcher Form auch, ohne schriftliche Genehmigung der Eigentümerin nicht gestattet.

Copyright est la propriété de S.G.B. Group p.l.c. Mitcham, Surrey. La reproduction ou la communication à des tiers, sous quelque forme que ce soit n'est permise qu'avec l'autorisation écrite du propriétaire.

Copyright in bezit van S.G.B. Group p.l.c. Mitcham, Surrey. Vermenigvuldiging of mededeling aan derden in welke vorm dan ook, is zonder schriftelijke toestemming van eigenares niet geoorloofd.

SGB GROUP p.l.c.
WILLOW LANE MITCHAM
SURREY Tel. 01-648 3400

MK II STEEL SOLDIER SYSTEM

SCHEDULE OF NUTS & BOLTS

Ref No. J29
Page No. 17
Date January 1985

GROUP RESEARCH AND DEVELOPMENT DIVISION

Item	Description	No. Off
Lifting Bracket	M16 x 35 Set Screws and Nuts	4
Hop Up Bracket	M16 x 90 Bolt and Nut	1
Support Plate	M16 x 35 Set Screws & Nuts	2
Stabiliser Units	M16 x 90 Bolt and Nuts	2
Web Bearing Plates	M12 x 80 Bolt and Nuts	2
Standard Push Pull Prop Adaptor	Fixed to Web Bearing Plates utilising Web Bearing Plates Bolts	-
Form Jack	M16 x 45 Set Screws & Nuts	2
Soldier to Soldier Joint Connection	M16 x 35 H.T. Set Screws and Nuts (Grade 8.8)	4
Shoring Adaptors	M16 x 35 H.T. Set Screws and Nuts (Grade 8.8)	4
Swivel Shoring Base	M24 x 90 H.T. Bolt and Nut (Grade 8.8) for anchorage details see page 71, 62.	1
H.D. Push Pull Prop Adaptor	M24 x 90 H.T. Bolt and Nut (Grade 8.8)	2
Trench Support Plate, Head and Base Plate or Forkhead may be secured to Shoring Adaptor with	M12 x 80 Bolt and Self Locking Nut (optional)	1
Forkhead for Shoring System	M16 x 260 long bolt and nut and special washer plate	2

Copyright in bezit van S.G.B. Group p.l.c. Mitcham, Surrey. Vermenigvuldiging of mededeling aan derden in welke vorm dan ook, is zonder schriftelijke toestemming van eigenares niet geoorloofd.

Copyright est la propriété de S.G.B. Group p.l.c. Mitcham, Surrey. La reproduction ou la communication à des tiers, sous quelque forme que ce soit n'est permise qu'avec l'autorisation écrite du propriétaire.

Copyright ist Eigentum der S.G.B. Group p.l.c. Mitcham, Surrey. Vervielfältigung oder Bekanntgabe an Dritte, in welcher Form auch, ohne schriftliche Genehmigung der Eigentümerin nicht gestattet.

Copyright owned by S.G.B. Group p.l.c. Mitcham, Surrey. Reproduction or disclosure to third parties in any form whatsoever is not allowed without the written consent of the proprietors ©Copyright S.G.B. Group p.l.c. 19

SGB GROUP LIMITED
WILLOW LANE MITCHAM
SURREY Tel. 01-648 3400

MK II STEEL SOLDIER SYSTEM

SCHEDULE OF HEIGHT MAKE-UPS

GROUP RESEARCH AND DEVELOPMENT DIVISION

Height	SOLDIER LENGTH						
	900	1125	1800	2700	3150	3600	Total No. of Soldiers
900	1						1
1125		1					1
1800			1				1
2025	1	1					2
2250		2					2
2700				1			1
2925		1	1				2
3150					1		1
3375		3					3
3600						1	1
3825		1		1			2
4050	1				1		2
4275		1			1		2
4500 (1)			1	1			2
4500 (2)	1					1	2
4725		1				1	2
4950			1		1		2
5175	1	1			1		3
5400 (1)			1			1	2
5400 (2)				2			2
5625	1	1				1	3
5850				1	1		2
6075		1	1		1		3
6300 (1)					2		2
6300 (2)				1		1	2
6525		1	1			1	3
6750					1	1	2
6975		1		1	1		3
7200						2	2

The above table gives the various combinations possible to make up heights up to 7.2m in multiples of 225mm.

Further combinations can be found using the following method.
E.g. Assume a shutter height of 10.2m is required.
10.2 ÷ 0.225 = 45.34 take as 46 multiples

46 Multiples can be made up of 16 + 16 + 14 = 46
or 3.6 + 3.6 + 3.15 = 10.35

900 = 4 Multiples of 225
1125 = 5 Multiples of 225
1800 = 8 Multiples of 225
2700 = 12 multiples of 225
3150 = 14 multiples of 225
3600 = 16 multiples of 225

Copyright owned by S.G.B. Group Limited, Mitcham, Surrey. Reproduction or disclosure to third parties in any form whatsoever is not allowed without the written consent of the proprietors. c. Copyright S.G.B. Group Limited 19

Copyright ist Eigentum der S.G.B. Limited, Mitcham, Surrey. Vervielfältigung oder Bekanntgabe an Dritte, in welcher Form auch, ohne schriftliche Genehmigung der Eigentümerin nicht gestattet.

Copyright est la propriété de S.G.B. Group Limited, Mitcham, Surrey. La reproduction ou la communication à des tiers, sous quelque forme que ce soit n'est permise qu'avec l'autorisation écrite du propriétaire.

Copyright in bezit van S.G.B. Group Limited, Mitcham, Surrey. Vermenigvuldiging of mededeling aan derden in welke vorm dan ook, is zonder schriftelijke toestemming van eigenares niet geoorloofd.

SGB GROUP p.l.c.
WILLOW LANE MITCHAM
SURREY Tel. 01-648 3400

MK II STEEL SOLDIER SYSTEM
EXTENSION ARRANGEMENTS
WITH SET SCREWS

Ref No. J29
Page No. 19
Date January 1984
GROUP RESEARCH AND DEVELOPMENT DIVISION

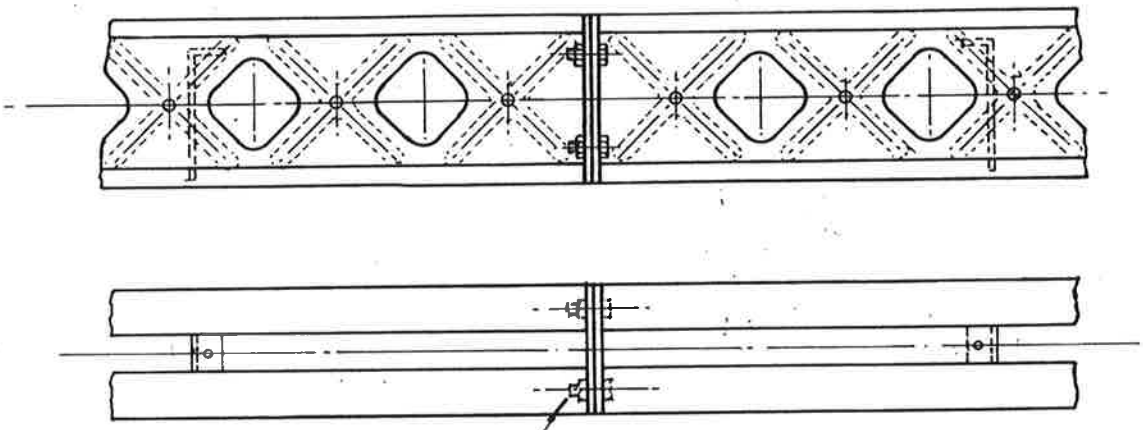

Fixed with 4 No. M16 x 35 High
Tensile Set Screws and Nuts. (Grade 8.8)

Washers can be used, in which case 40mm long set screws must be used.

Maximum Allowable Bending Moment at Joint = 10 kN.m.

To ensure that the "front" faces of multiple soldiers are co-planar it is important to bolt the soldiers together, with the two slots in the end plates on the same face (The "Back" face).

Copyright owned by S.G.B. Group p.l.c. Mitcham, Surrey. Reproduction or disclosure to third parties in any form whatsoever is not allowed without the written consent of the proprietors. © Copyright S.G.B. Group p.l.c. 1983

Copyright is the property of S.G.B. Group p.l.c. Mitcham, Surrey. Vervielfältigung oder Bekanntgabe an Dritte, in welcher Form auch, ohne schriftliche Genehmigung der Eigentümerin nicht gestattet.

Copyright est la propriété de S.G.B. Group p.l.c. Mitcham, Surrey. La reproduction ou la communication à des tiers, sous quelque forme que ce soit n'est permise qu'avec l'autorisation écrite du propriétaire.

Copyright is the property of S.G.B. Group p.l.c. Mitcham, Surrey. Vermenigvuldiging of mededeling aan derden in welke vorm dan ook, is zonder schriftelijke toestemming van eigenares niet geoorloofd.

Copyright in bezit van S.G.B. Group P.L.C. Mitcham, Surrey. Vermenigvuldiging of mededeling aan derden in welke vorm dan ook, is zonder schriftelijke toestemming van eigenares niet geoorloofd.

Copyright est la propriété de S.G.B. Group P.L.C. Mitcham, Surrey. La reproduction ou la communication à des tiers, sous quelque forme que ce soit n'est permise qu'avec l'autorisation écrite du propriétaire.

Copyright ist Eigentum der S.G.B. P.L.C. Mitcham, Surrey. Vervielfältigung oder Bekanntgabe an Dritte, in welcher Form auch, ohne schriftliche Genehmigung der Eigentümerin nicht gestattet.

Copyright owned by S.G.B. Group P.L.C. Mitcham, Surrey. Reproduction or disclosure to third parties in any form whatsoever is not allowed without the written consent of the proprietors. © Copyright S.G.B. Group P.L.C. 1983

Timber Waling Clamp

Clamp Code No: 4431/23
J Bolt Code No: 4431/24

Coach Screw (Alternative fixing)

M12 x 75 and M12 Washer
(For dimensions see page 6)

Mk 2 Wedge Clamp

Code No: 7156/90

(See data sheet K14 – Page 205 for details)

Mk II Universal Clamp

Code No: 4430/36
(For dimensions see page 7)

Waling Clip

Code No: 4455/00

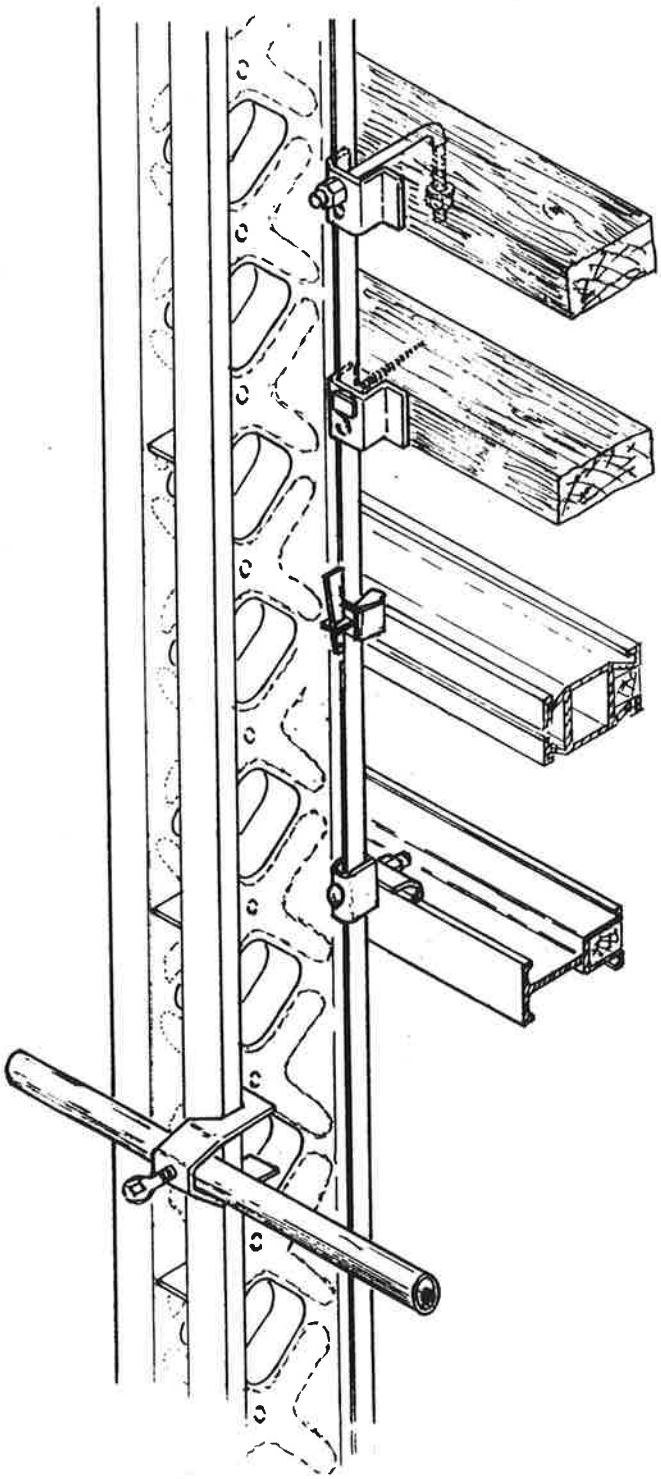

SGB GROUP p. l. c.
WILLOW LANE MITCHAM
SURREY Tel. 01-648 3400

MK II STEEL SOLDIER SYSTEM

USE OF ANCILLARY COMPONENTS

GROUP RESEARCH AND DEVELOPMENT DIVISION

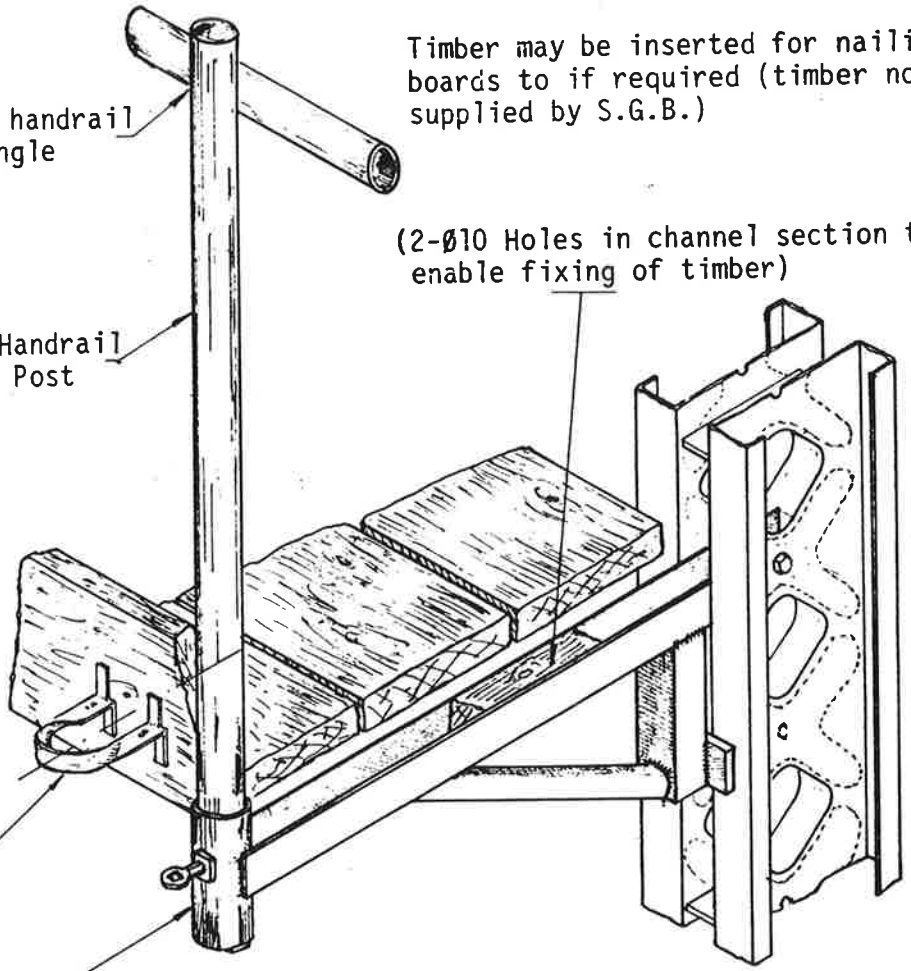

Code No: 4430/17
Weight: 5.6 Kg.
(For dimensions see page 3)
Fixed with 1 No. M16 x 90 bolt and nut.

Support Plate

Code No: 4430/19
Weight: 3.82 Kg.

The support plate is used to support the waling and/or form face, especially with crane handled assemblies.

The plate is fixed to the bottom of the soldier with two M16 x 35 set screws and nuts. The holes in the plate are positioned such that there is a choice of projection of the plate of 50 or 95mm.

A minimum of 2 per shutter are required, fixed to the bottom of the lifting soldiers.
(For dimensions see page 3)

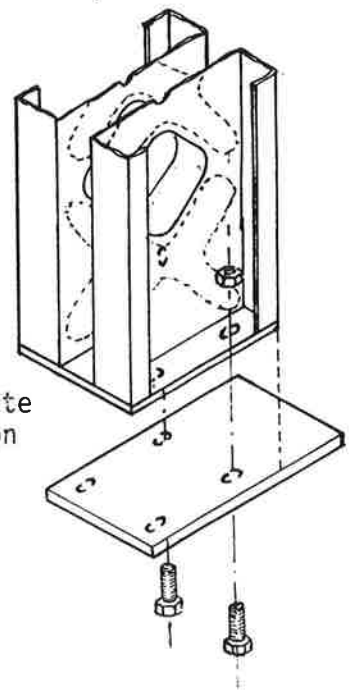

Copyright in bezit van S.G.B. Group P.L.C. Mitcham, Surrey. Vermenigvuldiging of mededeling aan derden in welke vorm dan ook, is zonder schriftelijke toestemming van eigenares niet geoorloofd.

Copyright est la propriété de S.G.B. Group P.L.C. Mitcham, Surrey. La reproduction ou la communication à des tiers, sous quelque forme que ce soit n'est permise qu'avec l'autorisation écrite du propriétaire.

Copyright ist Eigentum der S.G.B. P.L.C. Mitcham, Surrey. Vervielfältigung oder Bekanntgabe an Dritte, in welcher Form auch, ohne schriftliche Genehmigung der Eigentümerin nicht gestattet.

Copyright owned by S.G.B. Group P.L.C. Mitcham, Surrey. Reproduction or disclosure to third parties in any form whatsoever is not allowed without the written consent of the proprietors. © Copyright S.G.B. Group P.L.C. 1983

Copyright owned by S.G.B. Group PLC, Mitcham, Surrey. Reproduction or disclosure to third parties in any form whatsoever is not allowed without the written consent of the proprietors. © Copyright S.G.B. Group PLC 19

Copyright est la propriété de S.G.B. Group PLC, Mitcham, Surrey. La reproduction ou la communication à des tiers, sous quelque forme que ce soit n'est permise qu'avec l'autorisation écrite du propriétaire.

Copyright ist Eigentum der S.G.B. PLC, Mitcham, Surrey. Vervielfältigung oder Bekanntgabe an Dritte, in welcher Form auch, ohne schriftliche Genehmigung der Eigentümerin nicht gestattet.

Copyright in bezit van S.G.B. Group PLC, Mitcham, Surrey. Vermenigvuldiging of mededeling aan derden in welke vorm dan ook, is zonder schriftelijke toestemming van eigenaresse niet geoorloofd.

Form Jack

Code No: 4430/16
Weight: 4.9 Kg.
(For dimensions see page 5)

If form jacks are required, they can be fitted to the bottom of the soldier using 2 No. M16 x 45 set screws and nuts. A minimum of 2 form jacks per unit are required.

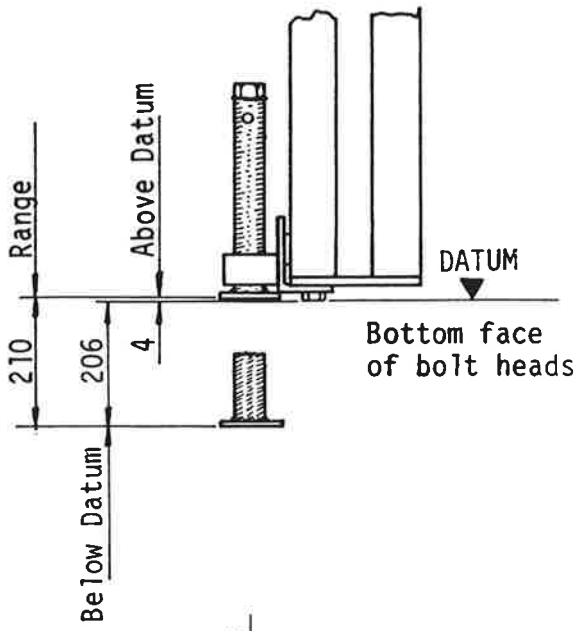

The Form Jack can be fitted to the bottom of the soldier as shown and used as a plumbing device on climbing shutters

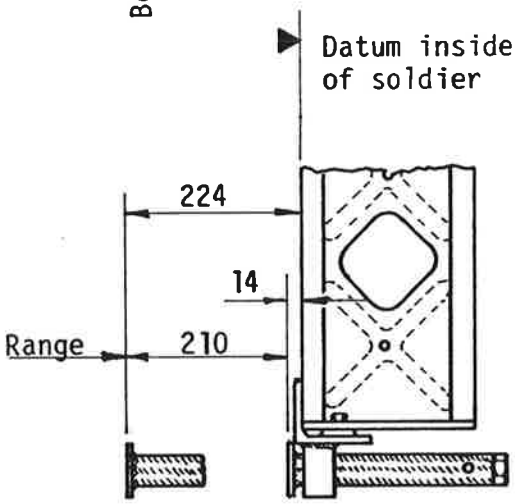

Lifting Bracket

Code No: 4430/15
Weight: 2.8 Kg.

There are normally 2 Lifting Brackets minimum per form unit, fixed to soldier with 4 No. M16 x 35 set screws and nuts.

(For dimensions see page 3)

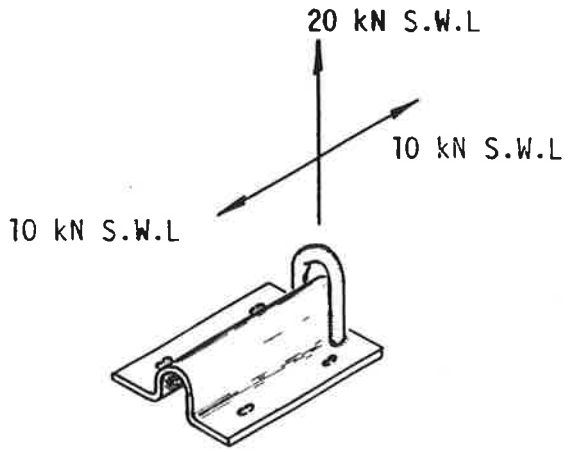

SGB GROUP p.l.c.
WILLOW LANE MITCHAM
SURREY Tel. 01-648 3400

MK II STEEL SOLDIER SYSTEM
USE OF ANCILLARY COMPONENTS

Ref No. J29
Page No. 23
Date July 1984
GROUP RESEARCH AND DEVELOPMENT DIVISION

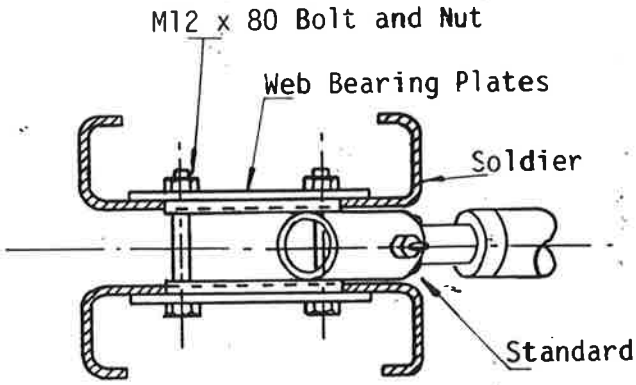

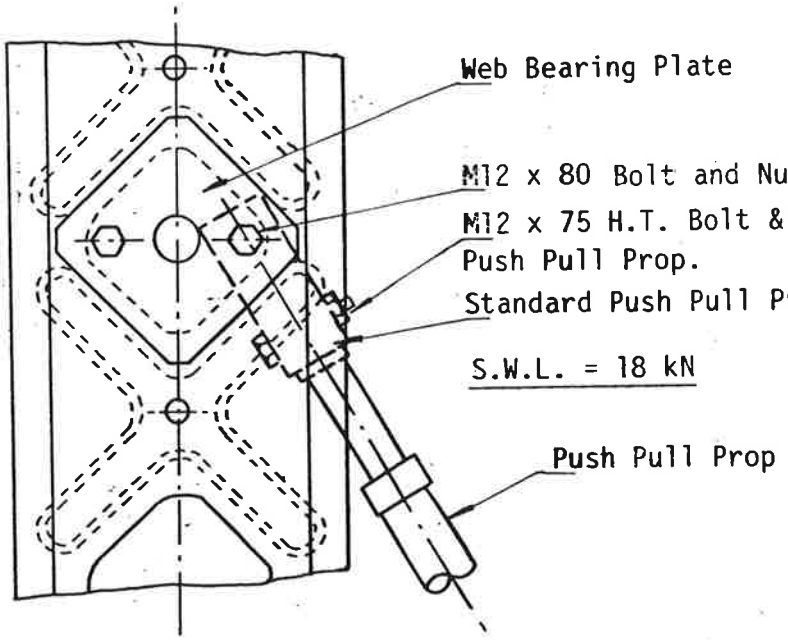

The Standard Push Pull Prop Adaptor used in conjunction with Web Bearing Plates, enables a Push Pull Prop to be used as a strutting medium.

The Adaptor fits over the 25mm dia. rod at the end of the Push Pull Prop, and is fixed using the bolt provided with the Push Pull Prop.

NOTE: Using standard M12 x 80 Bolts, the S.W.L of the Adaptor and Push Pull Prop is 18 kN.
If the full S.W.L. of 20.32 kN is required then a Grade 8.8 M12x80 Bolt should be used to fix the adaptor to the Web Bearing Plates.
For safe working loads of Push Pull Props see Ref No. B5 Page 1.
For dimensions of:
Web Bearing Plates see page 63
Standard Push Pull Prop Adaptor see page 4.

Copyright owned by S.G.B. Group p.l.c. Mitcham, Surrey. Reproduction or disclosure to third parties in any form whatsoever is not allowed without the written consent of the proprietors. ©Copyright S.G.B. Group p.l.c. 19
Copyright est la propriété de S.G.B. Group p.l.c. Mitcham, Surrey. La reproduction ou la communication à des tiers, sous quelque forme que ce soit n'est permise qu'avec l'autorisation écrite du propriétaire.
Copyright ist Eigentum der S.G.B. Group p.l.c, Mitcham, Surrey. Vervielfältigung oder Bekanntgabe an Dritte, in welcher Form auch, ohne schriftliche Genehmigung der Eigentümerin nicht gestattt.
Copyright in bezit van S.G.B. Group p.l.c. Mitcham, Surrey. Vermenigvuldiging of mededeling aan derden in welke vorm dan ook, is zonder schriftelijke toestemming van eigenaars niet geoorloofd.

SGB GROUP p.l.c.
WILLOW LANE MITCHAM
SURREY Tel. 01-648 3400

MK II STEEL SOLDIER SYSTEM
USE OF ANCILLARY COMPONENTS

Ref No. J29
Page No. 24
Date October 1984
GROUP RESEARCH AND DEVELOPMENT DIVISION

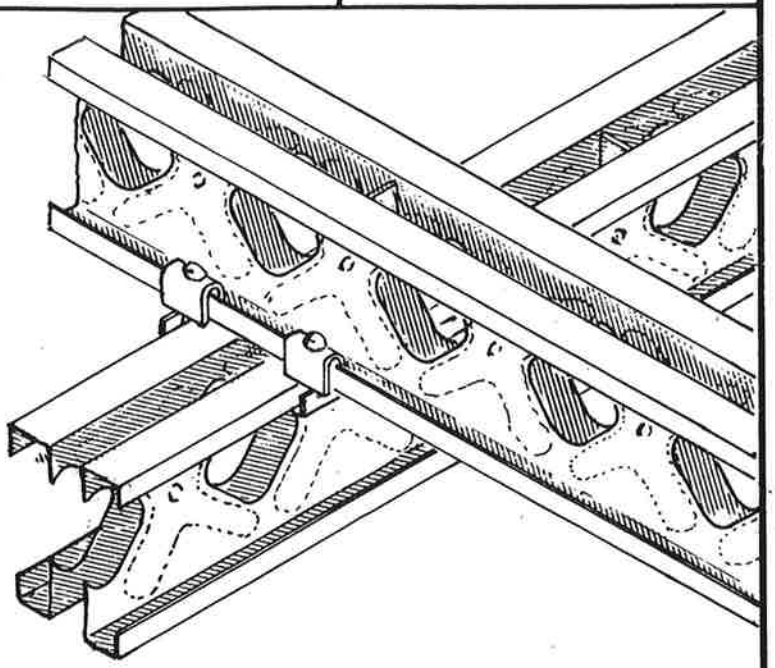

Mk II Universal Clamp

Code No: 4430/36
Weight: 0.6 kg

Used to secure Dual Walings to Soldiers, and Soldiers at right angles as illustrated (right) using 4 No. clamps.
The Mk II Universal Clamp will supersede the Universal Clamp (Mk I) Code No: 7171/90 (Ref. K14)

End Tie Washer

Code No: 4430/34
Weight: 0.65 kg

The End Tie Washer locates behind the Soldier End Plate, the Ø48 tube fitting into the Ø50 hole in the End Plate.

The adjoining Soldier being located over the short protruding tube, the Tie Rod, Nuts and Mk II Tie Washer may now be fixed, as illustrated (right).

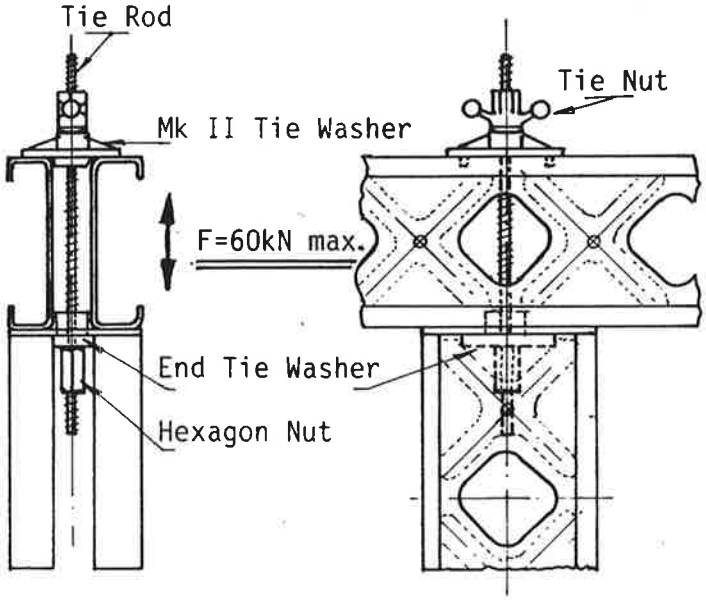

For details of:-

End Tie Washer see page 8
Mk II Tie Washer see page 8
For H.D. Tie System Details see Ref. No. J11 pages 1 and 2

Maximum tensile load in tie rod = 60 kN.

Copyright in bezit van S.G.B. Group p.l.c. Witcham, Surrey. Vermenigvuldiging of mededeling aan derden in welke vorm dan ook, is zonder schriftelijke toestemming van eigenares niet geoorloofd.
Copyright est la propriété du Groupe S.G.B. p.l.c. Mitcham, Surrey. La reproduction ou la communication à des tiers, sous quelque forme que ce soit n'est permise qu'avec l'autorisation écrite du propriétaire.
Copyright S.G.B. Group p.l.c. Mitcham, Surrey. Vervielfältigung oder Bekanntgabe an Dritte, in welcher Form auch, ohne schriftliche Genehmigung der Eigentümerin nicht gestattet.
Copyright owned by S.G.B. Group p.l.c. Mitcham, Surrey. Reproduction or circulation to unauthorised parties in any form whatsoever is not allowed without the written consent of the proprietors. © Copyright S.G.B. Group p.l.c. 19

SGB GROUP p.l.c.
WILLOW LANE MITCHAM
SURREY Tel. 01-648 3400

MK II STEEL SOLDIER SYSTEM

USE OF ANCILLARY COMPONENTS

GROUP RESEARCH AND DEVELOPMENT DIVISION

Clamp - Metriform Panel to Mk II Soldier

Code No: 4430/39

Fixing the end panel. The two notches provided in the clamp allow the use over an end plate or lifting bracket.

Panels along length of soldier

Fixing panels along length of soldiers with timber infill as make up. At position of clamp timber to be notched 25 x 30 x 11 deep to allow for clamp.

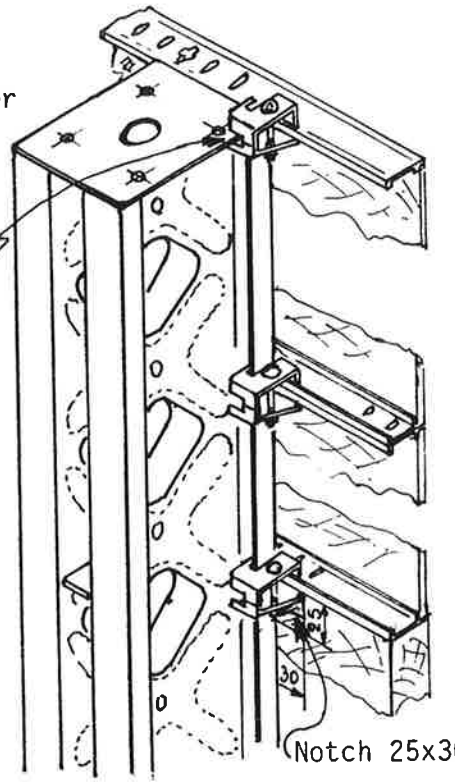

Copyright owned by S.G.B. Group p.l.c. Mitcham, Surrey. Reproduction or disclosure to third parties in any form whatsoever is not allowed without the written consent of the proprietor. © Copyright S.G.B. Group p.l.c. 19

Copyright est la propriété de S.G.B. Group p.l.c. Mitcham, Surrey. La reproduction ou la communication à des tiers, sous quelque forme que ce soit n'est permise qu'avec l'autorisation écrite du propriétaire.

Copyright ist Eigentum der S.G.B. Group p.l.c. Mitcham, Surrey. Vervielfältigung oder Bekanntgabe an Dritte, in welcher Form auch, ohne schriftliche Genehmigung der Eigentümerin nicht gestattet.

Copyright in bezit van S.G.B. Group p.l.c. Mitcham, Surrey. Vermenigvuldiging of mededeling aan derden in welke vorm dan ook, is zonder schriftelijke toestemming van eigenaars niet geoorloofd.

Copyright owned by S.G.B. Group P.L.C. Mitcham, Surrey. Reproduction or disclosure to third parties in any form whatsoever is not allowed without the written consent of the proprietors. © Copyright S.G.B. Group P.L.C. 19

Copyright in bezit van S.G.B. Group P.L.C. Mitcham, Surrey. Vermenigvuldiging of mededeling aan derden in welke vorm dan ook, is zonder schriftelijke toestemming van eigenares niet geoorloofd.

Copyright est la propriété de S.G.B. Group P.L.C. Mitcham, Surrey. La reproduction ou la communication à des tiers, sous quelque forme que ce soit n'est permise qu'avec l'autorisation écrite du propriétaire.

Copyright ist Eigentum der S.G.B. P.L.C. Mitcham, Surrey. Vervielfältigung oder Bekanntgabe an Dritte, in welcher Form auch, ohne schriftliche Genehmigung der Eigentümerin nicht gestattet.

Diagram 1 (for diagrams see page 31)

When an appropriate number of soldiers have been assembled setting out can proceed. This is best done on even ground, but if this is not possible continuous timber plates can be laid down to provide a common level for the back of the soldiers, as shown in Diagram 1. The soldiers are spaced to the required centres ready to receive the waling members. Note that if numerous forms are to be constructed, timber blocking pieces appropriately spaced and fixed to the plates will greatly speed centring. Form jacks may be fixed to base of soldier.

Diagram 2

When there is no facility to stop the soldier being displaced from their present centres, it is useful to initially place and fix two walings in the positions shown, which 'hold' the soldiers during the placing of the remaining walings. (The walings shown on diagram 2 are Timber. For method of fixing Timber, Steel and Aluminium walings to soldier see page

Diagram 3

This diagram shows all the walings in position. It is recommended to fix walings to soldiers at every intersection. The waling centres shall be in accordance with the appropriate design requirements and when secured, allow the placing of the plywood sheeting to commence. This diagram also shows the lifting bracket which is attached to the End Plate at the top of the soldier for crane handling.

Diagram 4

This diagram shows the complete form ready for in situ positioning with the attached form jacks which allow quick levelling of the unit in a horizontal plane.

Note:

It may be necessary on some occasions to join two lengths of soldier together to obtain a desired form height (See Data Sheets 19)

To ensure that the "front" faces of multiple soldiers are co-planar it is important to bolt the soldiers together, with the two slots in the end plates on the same face. (The "Back" face).

SGB GROUP p.l.c.
WILLOW LANE MITCHAM
SURREY Tel. 01-648 3400

MK II STEEL SOLDIER SYSTEM

WALLFORMWORK ASSEMBLY

Ref No. J29
Page No. 31
Date January 1984

GROUP RESEARCH AND DEVELOPMENT DIVISION

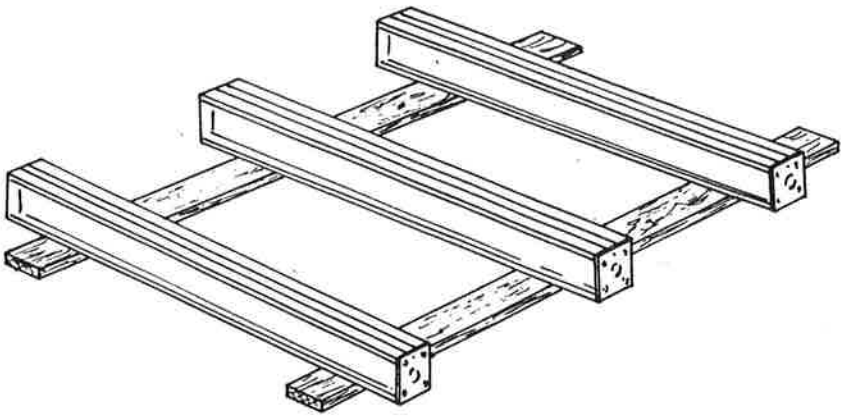

DIAG. 1

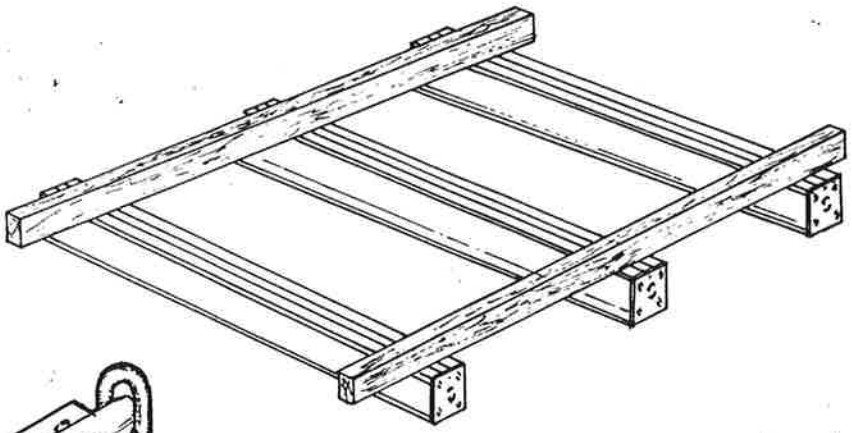

DIAG. 2

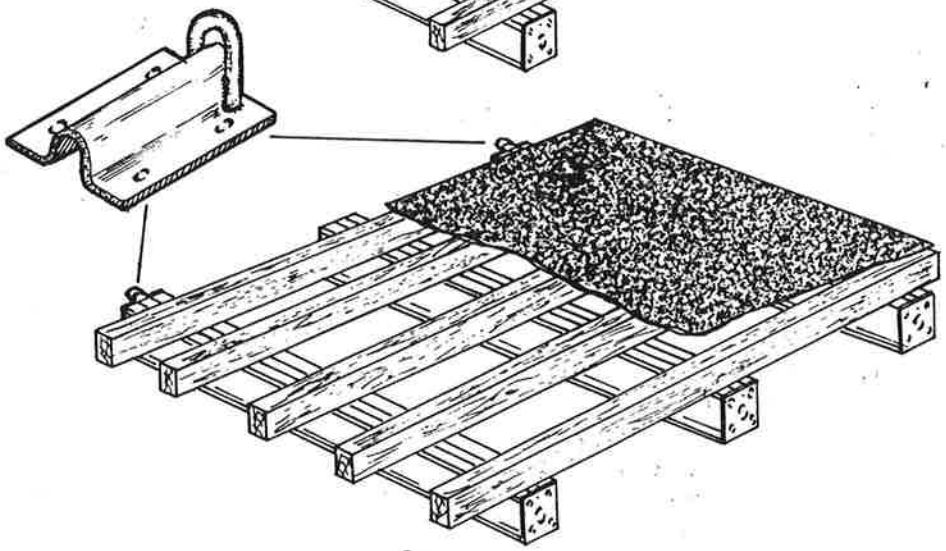

DIAG. 3

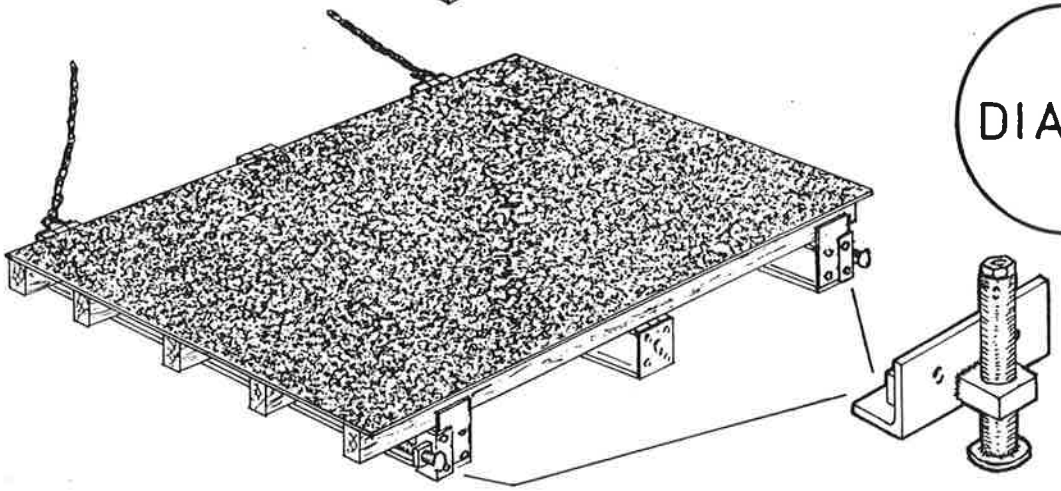

DIAG. 4

Copyright in bezit van S.G.B. Group p.l.c. Mitcham, Surrey. Vermenigvuldiging of mededeling aan derden in welke vorm dan ook, is zonder schriftelijke toestemming van eigenares niet geoorloofd.

Copyright est la propriété de S.G.B. Group p.l.c. Mitcham, Surrey. La reproduction ou la communication à des tiers, sous quelque forme que ce soit n'est permise qu'avec l'autorisation écrite du propriétaire.

Copyright ist Eigentum der S.G.B. Group p.l.c. Mitcham, Surrey. Vervielfältigung oder Bekanntgabe an Dritte, in welcher Form auch, ohne schriftliche Genehmigung der Eigentümerin nicht gestattet.

Copyright owned by S.G.B. Group p.l.c. Mitcham, Surrey. Reproduction or disclosure to third parties in any form whatsoever is not allowed without the written consent of the proprietors. © Copyright S.G.B. Group p.l.c. 19

SGB GROUP p.l.c.
WILLOW LANE MITCHAM
SURREY Tel. 01-648 3400

MK II STEEL SOLDIER SYSTEM

ASSEMBLY OF SHUTTER USING NEW STEEL WALINGS

Ref No. J29
Page No. 32
Date January 1984
GROUP RESEARCH AND DEVELOPMENT DIVISION

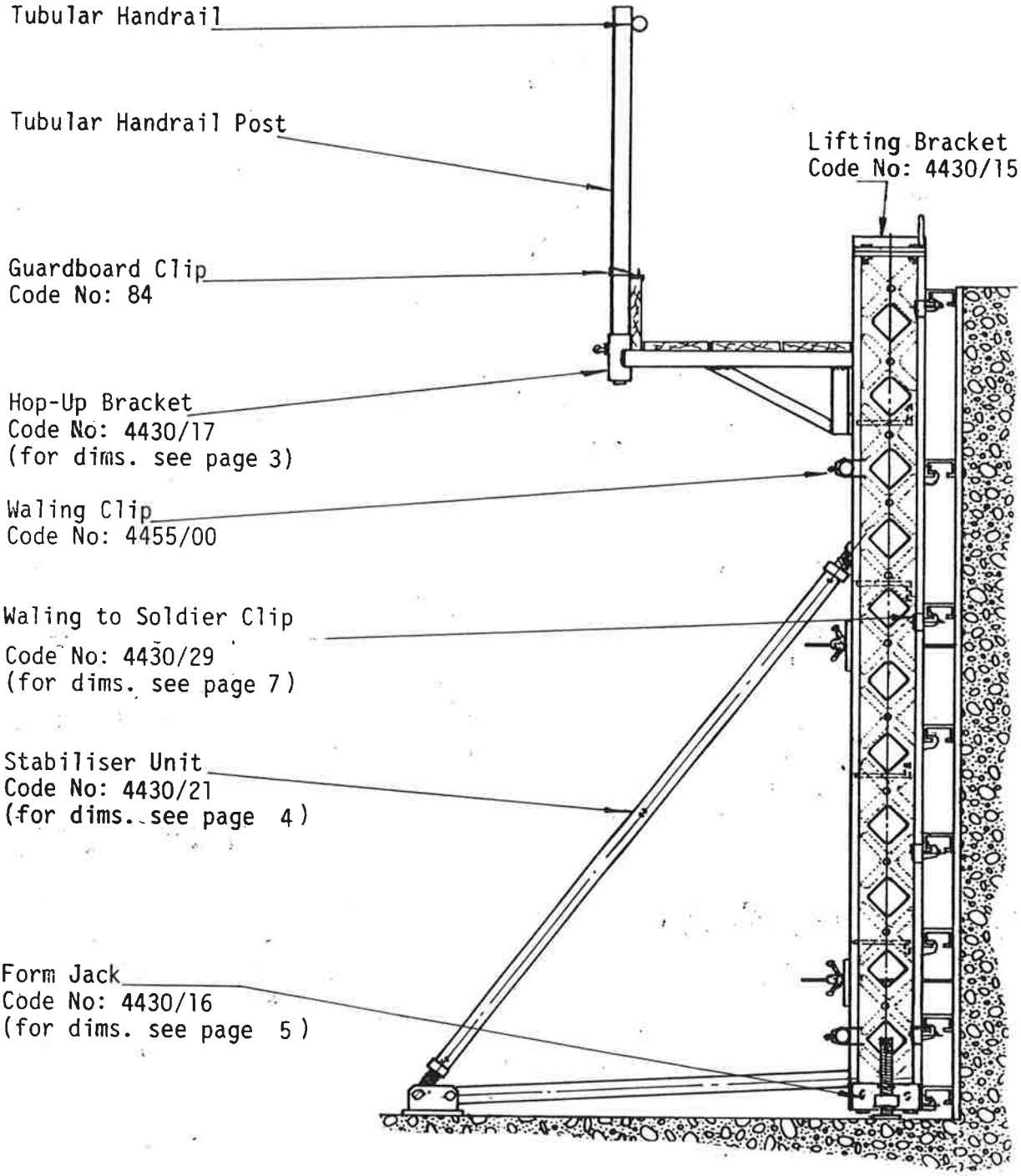

Steel Walings can be fixed to the Soldier at any vertical interval using Waling to Soldier Clip. Code No: 4430/29

As shown on pages 7 and 20

(For details of Heavy Duty Ties see data sheets Ref. J11)

Copyright in bezit van S.G.B. Group P.L.C. Mitcham, Surrey. Vermenigvuldiging of mededeling aan derden in welke vorm dan ook, is zonder schriftelijke toestemming van eigenares niet geoorloofd.

Copyright est la propriété de S.G.B. Group P.L.C. Mitcham, Surrey. La reproduction ou la communication à des tiers, sous quelque forme que ce soit n'est permise qu'avec l'autorisation écrite du propriétaire.

Copyright eigentum der S.G.B. Group P.L.C. Mitcham, Surrey. Vervielfältigung oder Bekanntgabe an Dritte in welcher Form auch, ohne schriftliche Genehmigung der Eigentümerin nicht gestattet.

Copyright S.G.B. Group P.L.C. Mitcham, Surrey. Reproduction or disclosure to third parties in any form whatsoever is not allowed without the written consent of the proprietors. © Copyright S.G.B. Group P.L.C. 19

SGB GROUP p.l.c.
WILLOW LANE MITCHAM
SURREY Tel. 01-648 3400

MK II STEEL SOLDIER SYSTEM

ASSEMBLY OF SHUTTER USING DU-AL WALINGS

Ref No. J29
Page No. 33
Date January 1984

GROUP RESEARCH AND DEVELOPMENT DIVISION

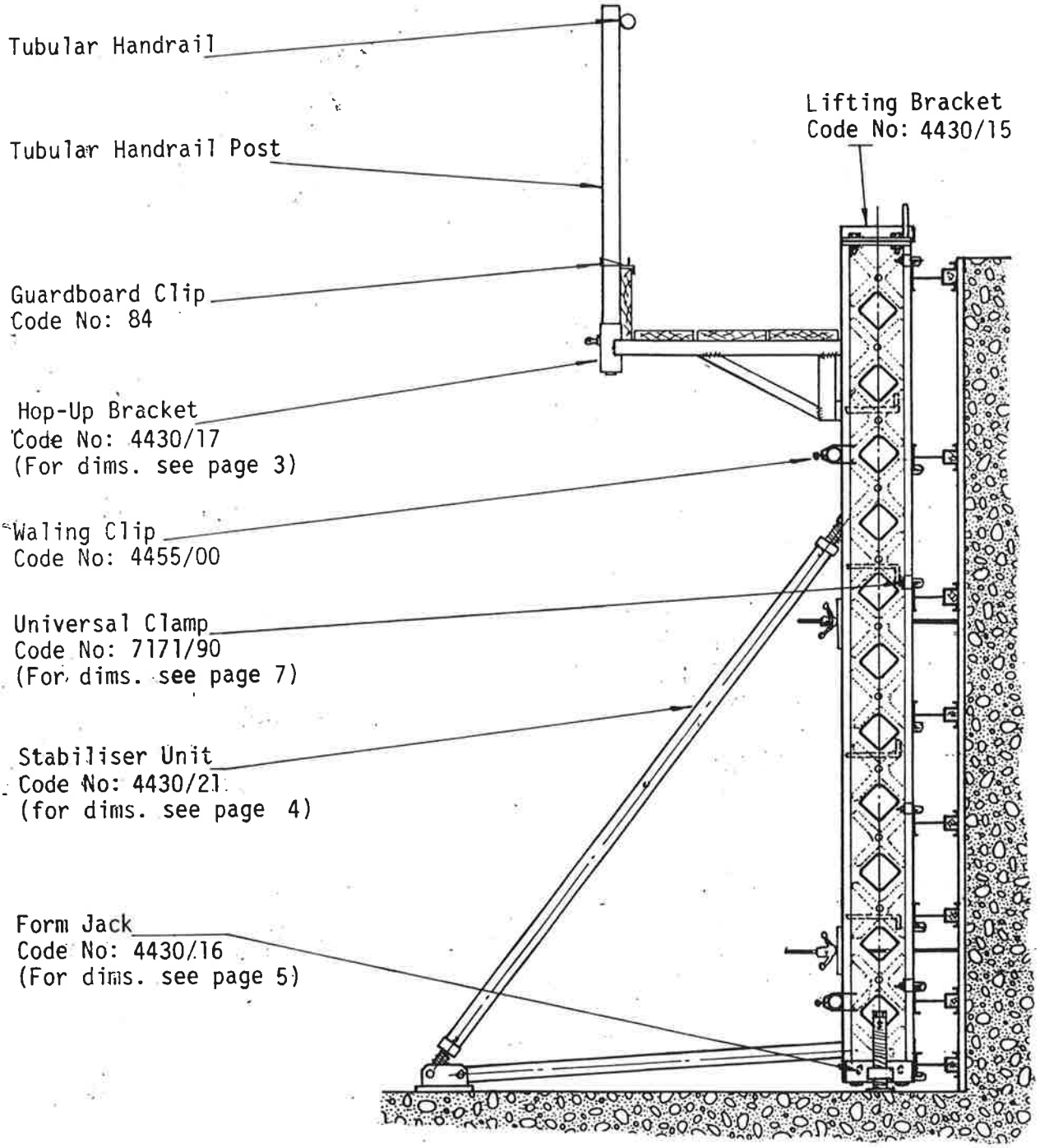

DU- AL (Walings) Secondary Beams can be fixed at any vertical interval using the Universal Clamp. Code No: 7171/90.

As shown on pages 7 and 20.

(For details of Heavy Duty Ties see data sheets Ref. J11)

Copyright owned by S.G.B. Group P.L.C. Mitcham, Surrey. Reproduction or disclosure to third parties in any form whatsoever is not allowed without the written consent of the proprietors. © Copyright S.G.B. Group P.L.C. 19

Copyright ist Eigentum der S.G.B. P.L.C. Mitcham, Surrey. Vervielfältigung oder Bekanntgabe an Dritte, in welcher Form auch, ohne schriftliche Genehmigung der Eigentümerin nicht gestattet.

Copyright est la propriété de S.G.B. Group P.L.C. Mitcham, Surrey. La reproduction ou la communication à des tiers, sous quelque forme que ce soit n'est permise qu'avec l'autorisation écrite du propriétaire.

Copyright in bezit van S.G.B. Group P.L.C. Mitcham, Surrey. Vermenigvuldiging of mededeling aan derden in welke vorm dan ook, is zonder schriftelijke toestemming van eigenares niet geoorloofd.

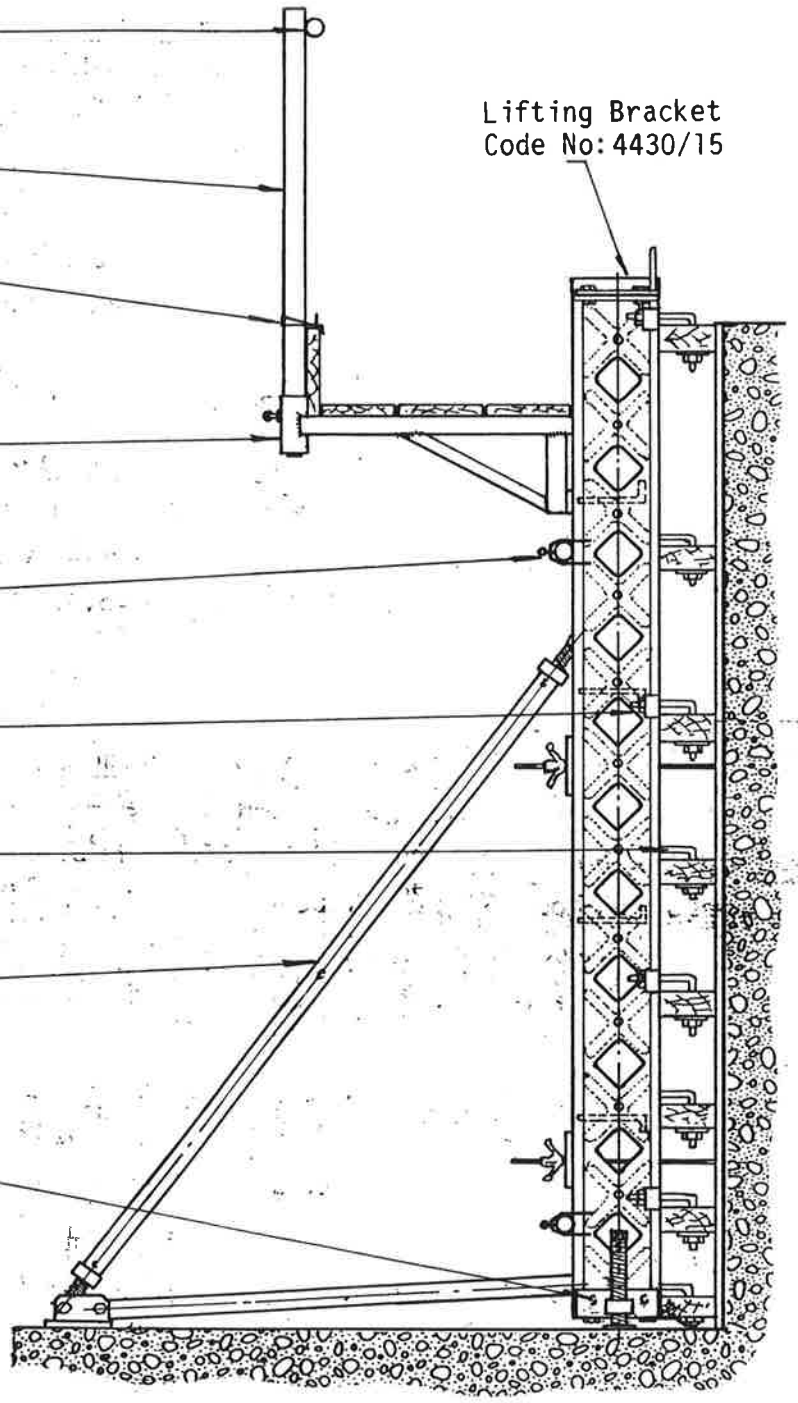

Timber walings can be fixed to the soldier at any vertical interval using either Clamp and J Bolt Code No: 4431/23 and 4431/24 or Clamp and Coach Screw M12 x 75 and M12 Washer.

As shown on pages 6 and 20

(For details of Heavy Duty Ties see data sheets Ref. J11)

Copyright in bezit van S.G.B. Group P.L.C. Mitcham, Surrey. Vermenigvuldiging of mededeling aan derden in welke vorm dan ook, is zonder schriftelijke toestemming van eigenares niet geoorloofd.

Copyright est la propriété de S.G.B. Group P.L.C. Mitcham, Surrey. La reproduction ou la communication à des tiers, sous quelque forme que ce soit n'est permise qu'avec l'autorisation écrite du propriétaire.

Copyright ist Eigentum der S.G.B. P.L.C. Mitcham, Surrey. Vervielfältigung oder Bekanntgabe an Dritte, in welcher Form auch, ohne schriftliche Genehmigung der Eigentümerin nicht gestattet.

Copyright owned by S.G.B. Group P.L.C. Mitcham, Surrey. Reproduction or disclosure to third parties in any form whatsoever is not allowed without the written consent of the proprietors. © Copyright S.G.B. Group P.L.C. 19

Copyright owned by S.G.B. Group p.l.c. Mitcham, Surrey. Reproduction or disclosure to third parties in any form whatsoever is not allowed without the written consent of the proprietors. © Copyright S.G.B Group p.l.c 19

Copyright ist Eigentum der S.G.B. Group p.l.c. Mitcham, Surrey. Vervielfältigung oder Bekanntgabe an Dritte, in welcher Form auch, ohne schriftliche Genehmigung der Eigentümerin nicht gestattet.

Copyright est la propriété de S.G.B. Group p.l.c. Mitcham, Surrey. La reproduction ou la communication à des tiers, sous quelque forme que ce soit n'est permise qu'avec l'autorisation écrite du propriétaire.

Copyright in bezit van S.G.B. Group p.l.c. Mitcham, Surrey. Vermenigvuldiging of mededeling aan derden in welke vorm dan ook, is zonder schriftelijke toestemming van eigenares niet geoorloofd.

UDO 40573

Metriform Panels can be used in conjunction with the SGB Mk II Steel Soldier. This method enables Metriform Panels to be used on crane handled forms with a minimum number of ties through the concrete. The method shown below uses timber infills at tie positions, so as to avoid drilling holes in the plywood of the panels. Alternatively (shown on the right) if ties are only needed at the top and bottom of a soldier the intermediate timber can be left out.

Timber secured to panels with M12 bolt and nut.

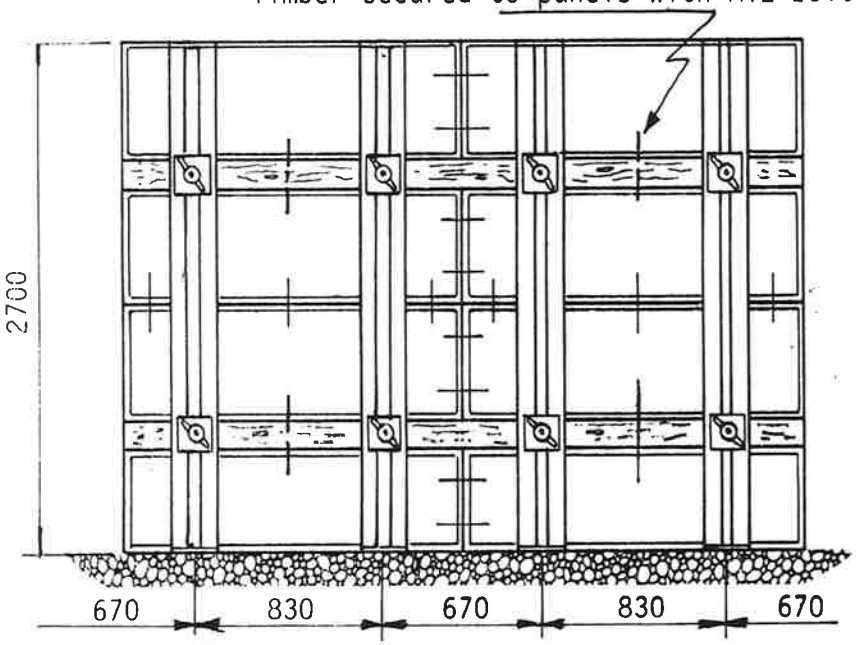

Clamp - Metriform Panel to Mk II Soldier.
For details of fixing see page 26.

Alternatively, lifting brackets may be used on every soldier and the tie passed through it, over the soldier.

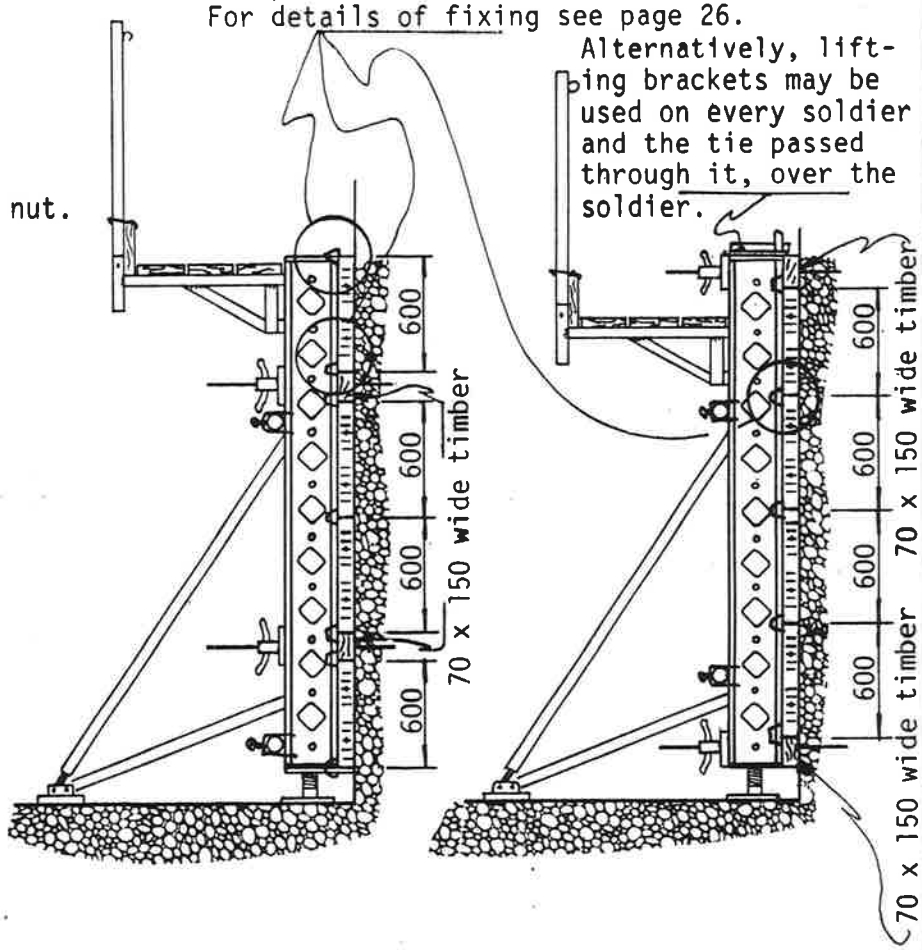

The maximum pressure allowed on the Metriform panels is 35 kN/m². The arrangement shown above, with two soldiers per panel is the most convenient and the full allowable pressure can be achieved with the use of the 1.5m panel.

Alignment can be achieved using tubes and waling clips as shown on preceeding page.

Note: When using metriform panels as a formface, support plates (see page 3 & 21) must be used as support for the panels, especially when the shutter is crane handled. A minimum of 2 per shutter are required fixed to the soldiers used for lifting.

SGB GROUP p.l.c.
WILLOW LANE MITCHAM SURREY Tel. 01-648 3400

MK II STEEL SOLDIER SYSTEM
ASSEMBLY OF SHUTTER USING METRIFORM PANELS

GROUP RESEARCH AND DEVELOPMENT DIVISION

Ref No. J29
Page No. 35
Date December 1985

SGB GROUP LIMITED
WILLOW LANE MITCHAM
SURREY Tel. 01-648 3400

MK II STEEL SOLDIER SYSTEM

SOLDIER SPACING AND TIE LOADS

INTRODUCTION

GROUP RESEARCH AND DEVELOPMENT DIVISION

The loading data on the following pages has been calculated using the parameters set out below.

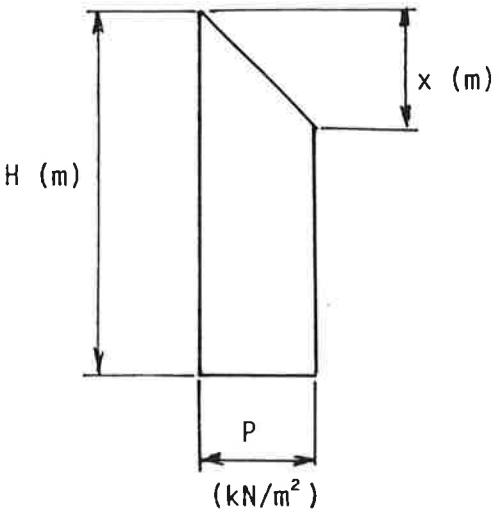

Concrete Pressure

P = Concrete Pressure .... kN/m²
Density of Concrete 2500 kg/m³
x = P/25 .... (m)
H = Height of Pour (taken as height of Soldier)

Soldier Properties

Max. Bending Moment	....	38 kN.m
Max. B.M. at Joint	....	10 kN.m
Max. Tie Load	....	115 kN
E.I. Stiffness	....	3250 kN.m²

The pressure diagram that has been used, is that recommended in CERA Research Report No. 1. "The Pressure of Concrete on Formwork". Values of Concrete pressure (P) have been established from CIRIA Data Sheet "Concrete Pressure on Formwork".

The maximum spacing of Soldiers may be limited by either the Tie Load of 115kN, Max. B.M. of 38 kN.m or a limiting deflection, which has been taken as 6mm. The Limiting case may be found by inspection in the acoompanying Tables.

The tables and graphs are based on forms with continuous spanning walings such that the Continuity Factor is 1.0. Where this is not the case, suitable adjustment should be made to ensure that the maximum tie loads and Bending Moments are not exceeded.

Example 1: 5.4m high soldier, 3 ties, P = 40 kN/m² (page 50) Limiting factor is tie load (114.4 kN). Continuity factor is now to be taken as 1.1, therefore spacing is to be reduced to $\frac{1}{1.1}$ x 1.67 = 1.52m

In the cases where the spacing of soldiers is arbitrarily limited to 2.0m (as shown in the graphs) then the above calculation will give a slightly restricted spacing. In this particular case a more accurate answer can be obtained by multiplying B.M, tie load and deflection as shown in the tables by the continuity factor ratio and then reducing the spacings of soldiers so that only one of these factors becomes limiting.
i.e. B.M. = 38 kN.m or tie load 115 kN.m or deflection = 6mm.

Example 2: 4.275m high soldier, 3 ties, P = 40 kN/m² (page 46)
Limiting factor is soldier spacing (2.0m) Continuity factor is to be taken as 1.25 and therefore B.M. = 1.25 x 14.4 = 18.0 kN.m. Tie load = 1.25 x 108.6 = 135.75 kN and deflection = 1.25 x 0.97 = 1.21mm. It can be seen that the tie load is now limiting and therefore the soldier spacing will have to be reduced to

$\frac{115}{135.75}$ x 2.0 = 1.69m

The following data is for typical arrangements. Other cases can be analysed by S.G.B. Design offices, and full information provided.

Copyright owned by S.G.B. Group Limited, Mitcham, Surrey. Reproduction or disclosure to third parties in any form whatsoever is not allowed without the written consent of the proprietors. © Copyright S.G.B. Group Limited 19
Copyright is eigentun. S.G.B. Limited, Mitcham, Surrey. Vervielfältigung oder Bekanntgabe an Dritte, in welcher Form auch, ohne schriftliche Genehmigung der Eigentümerin nicht gestattit.
Copyright est la propriété de S.G.... Group Limited, Mitcham, Surrey. La reproduction ou la communication à des tiers, sous quelque forme que ce soit n'est permise qu'avec l'autorisation écrite du propriétaire.
Copyright in bezit van S.G.B. Group Limited, Mitcham, Surrey. Vermenigvuldiging of mededeling aan derden in welke vorm den ook, is zonder schriftelijke toestemming van eigenares niet geoorloofd.

SGB GROUP p.l.c.
WILLOW LANE MITCHAM
SURREY Tel. 01-648 3400

MK II STEEL SOLDIER SYSTEM

SOLDIER SPACING AND TIE LOAD GRAPHS FOR 1.8 & 2.7 FORM

Ref No. J29
Page No. 41
Date January 1984
GROUP RESEARCH AND DEVELOPMENT DIVISION

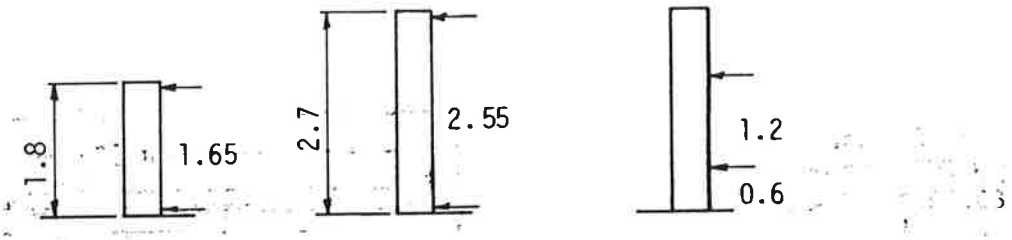

1.8m
2 TIES

2.7m
2 TIES (A)

2.7m
2 TIES (B)

Soldiers may be spaced at 2.0m centres for a Concrete Pressure up to the maximum of 45 kN/m² with the tie arrangement shown above for the 1.8m Form.

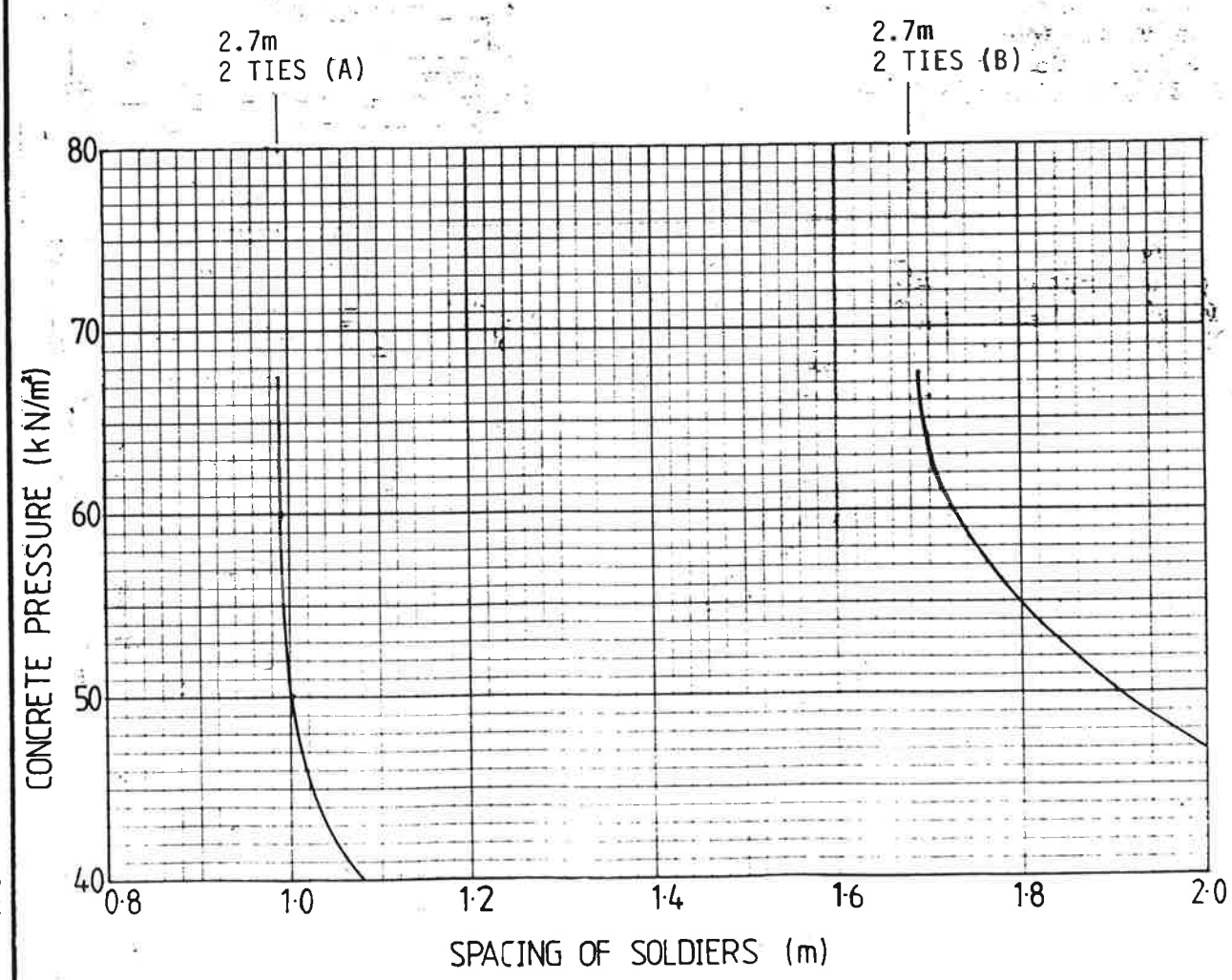

See also the table on following page

Copyright owned by S.G.B. Group Limited, Mitcham, Surrey. Reproduction or disclosure to third parties in any form whatsoever is not allowed without the written consent of the proprietors. © Copyright S.G.B. Group Limited 19

Copyright est la propriété de S.G.B. Group Limited, Mitcham, Surrey. La reproduction ou la communication à des tiers, sous quelque forme que ce soit n'est permise qu'avec l'autorisation écrite du propriétaire.

Copyright ist Eigentum der S.G.B. Limited, Mitcham, Surrey. Vervielfältigung oder Bekanntgabe an Dritte, in welcher Form auch, ohne schriftliche Genehmigung der Eigentümerin nicht gestattet.

Copyright in bezit van S.G.B. Group Limited, Mitcham, Surrey. Vermenigvuldiging of mededeling aan derden in welke vorm dan ook, is zonder schriftelijke toestemming van eigenares niet geoorloofd.

SGB GROUP p.l.c.
WILLOW LANE MITCHAM
SURREY Tel. 01-648 3400

MK II STEEL SOLDIER SYSTEM

SOLDIER SPACING AND TIE LOAD TABLES FOR 1.8 & 2.7m FORMS

Ref No. J29
Page No. 42
Date January 1984

GROUP RESEARCH AND DEVELOPMENT DIVISION

Concrete Pressure kN/m²		1.8m	2.7m (A)	2.7m (B)
40	SPACING (m)	2.00	1.08	2.00
	MAX. TIE LOAD	54.4	52.2	100.6
	MAX. B.M. (kN.m)	15. 48	27.30	14.40
	AT X = (m)	0.74	1.10	0.60
	MAX DEFLECTION	1.18	6.00	0.80
	AT X = (m)	0.90	1.35	0.00
45	SPACING (m)	2.00	1.03	2.00
	MAX. TIE LOAD	55.3	54.1	111.5
	MAX. B.M. (kN.m)	15.44	27.42	16.20
	AT X = (m)	0.74	1.10	0.60
	MAX DEFLECTION	1.18	6.00	0.95
	AT X = (m)	0.90	1.35	0.00
50	SPACING (m)		1.00	1.90
	MAX. TIE LOAD		56.1	114.8
	MAX. B.M. (kN.m)		27.40	17.10
	AT X = (m)		1.10	0.60
	MAX DEFLECTION		6.00	1.08
	AT X = (m)		1.35	0.00
60	SPACING (m)		0.99	1.72
	MAX. TIE LOAD		60.0	114.9
	MAX. B.M. (KN.m)		27.60	18.39
	AT X = (m)		1.10	0.60
	MAX DEFLECTION		6.00	1.30
	AT X = (m)		1.35	0.00
67·5	SPACING (m)		0.99	1.68
	MAX. TIE LOAD		61.1	114.8
	MAX. B.M. (kN.m)		27.60	18.90
	AT X = (m)		1.10	0.60
	MAX DEFLECTION		6.00	1.38
	AT X = (m)		1.35	0.00

Distance X is from the base of the wall.

Copyright in bezit van S.G.B. Group Limited, Mitcham, Surrey. Vermenigvuldiging of mededeling aan derden in welke vorm den ook, is zonder schriftelijke toestemming van bigenares niet geoorloofd.

Copyright est la propriété de S.G.B. Group Limited, Mitcham, Surrey. La reproduction ou la communication à des tiers, sous quelque forme que ce soit n'est permise qu'avec l'autorisation écrite du propriétaire.

Copyright is eigentu... / S.G.B. Limited, Mitcham, Surrey. Vervielfältigung oder Bekanntgabe an Dritte, in welcher Form auch, ohne schriftliche Genehmigung der Eigentümerin nicht gestattet.

Copy... owned ... S.G.B. Group Limited, Mitcham, Surrey. Reproduction or disclosure to third parties in any form whatsoever is not allowed without the written consent of the proprietors. © Copyright S.G.B. Group Limited 19

SGB GROUP p.l.c.
WILLOW LANE MITCHAM
SURREY Tel. 01-648 3400

MK II STEEL SOLDIER SYSTEM

SOLDIER SPACING AND TIE LOAD GRAPHS FOR 3.15 & 3.6m FORMS

Ref No. J29
Page No. 43
Date January 1984
GROUP RESEARCH AND DEVELOPMENT DIVISION

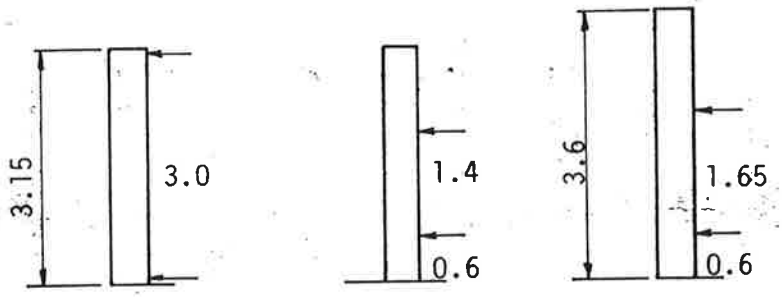

2 TIES (A) | 2 TIES (B) | 2 TIES

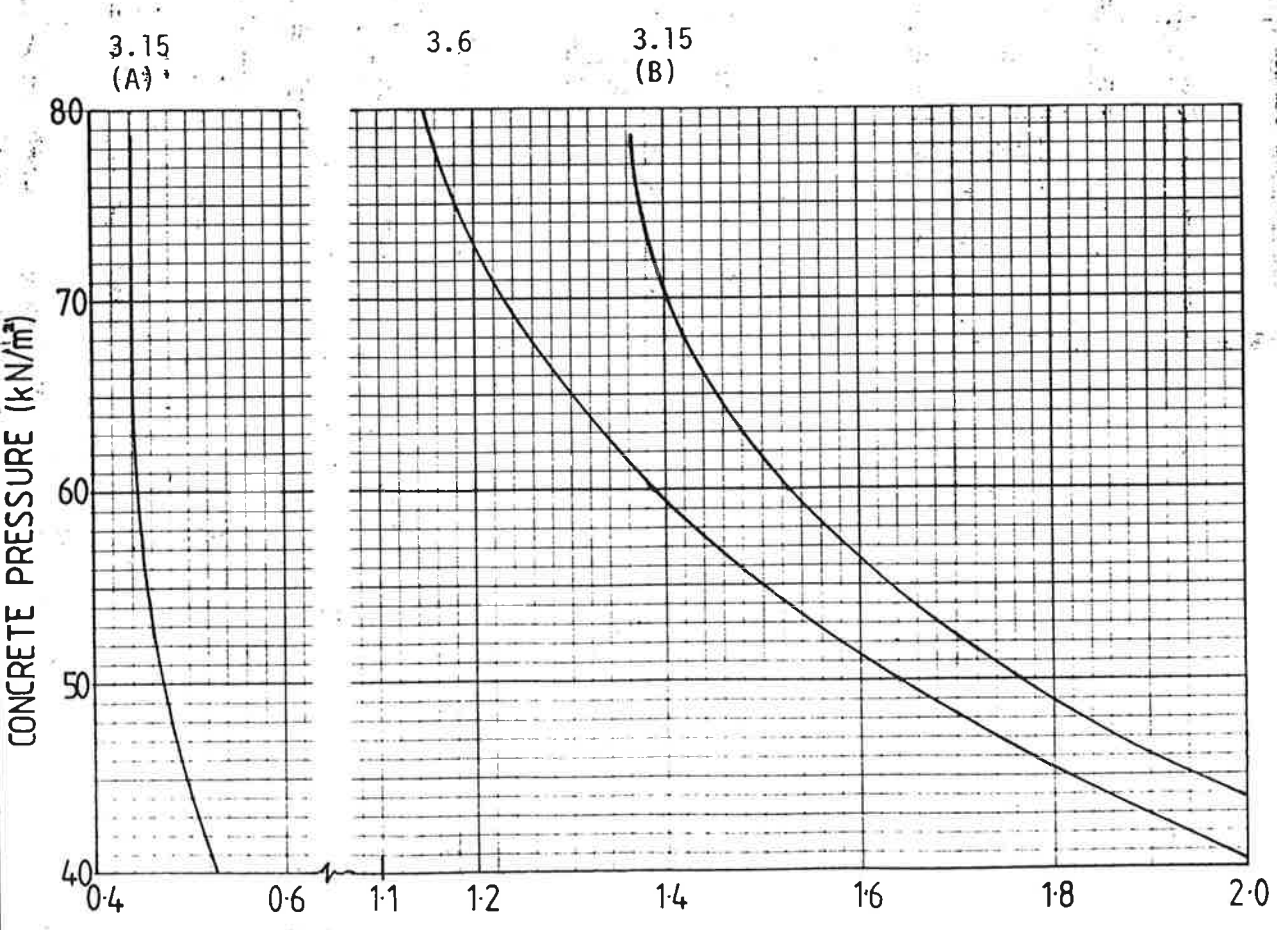

See also table on the following page

Copyright in bezit van S.G.B. Group Limited, Mitcham, Surrey. Vermenigvuldiging of mededeling aan derden in welke vorm dan ook, is zonder schriftelijke toestemming van, eigenares niet geoorloofd.

Copyright est la propriété de S.G.B. Group Limited, Mitcham, Surrey. La reproduction ou la communication à des tiers, sous quelque forme que ce soit n'est permise qu'avec l'autorisation écrite du propriétaire.

Copyright ist eigentum von S.G.B. Limited, Mitcham, Surrey. Vervielfältigung oder Bekanntgabe an Dritte, in welcher Form auch, ohne schriftliche Genehmigung der Eigentümerin nicht gestattet.

Copyright owned by S.G.B. Group Limited, Mitcham, Surrey. Reproduction or disclosure to third parties in any form whatsoever is not allowed without the written consent of the proprietors. © Copyright S.G.B. Group Limited 19

SGB GROUP p.l.c.
WILLOW LANE MITCHAM
SURREY Tel. 01-648 3400

MK II STEEL SOLDIER SYSTEM

SOLDIER SPACING AND TIE LOADS TABLES FOR 3.15 and 3.6 FORMS

Ref No. 129
Page No. 44
Date January 1984

GROUP RESEARCH AND DEVELOPMENT DIVISION

Concrete Pressure kN/m²		3.15 (A)	3.15 (B)	3.6
40	SPACING (m)	0.52	2.00	2.00
	MAX. TIE LOAD	30.3	104.8	113.9
	MAX. B.M.	19.59	14.40	20.46
	AT X = (m)	1.58	0.60	2.25
	MAX DEFLECTION	6.00	1.34	2.77
	AT X = (m)	1.58	3.15	3.60
50	SPACING (m)	0.47	1.76	1.64
	MAX. TIE LOAD	32.5	114.6	114.5
	MAX. B.M.	19.87	15.84	16.78
	AT X = (m)	1.28	0.60	2.25
	MAX DEFLECTION	6.00	1.09	1.59
	AT X = (m)	1.58	3.15	3.60
60	SPACING (m)	0.44	1.52	1.38
	MAX. TIE LOAD	34.0	114.6	114.5
	MAX. B.M.	19.57	16.42	14.90
	AT X = (m)	1.28	0.60	0.60
	MAX DEFLECTION	6.00	1.10	1.16
	AT X = (m)	1.58	3.15	3.60
70	SPACING (m)	0.44	1.40	1.22
	MAX. TIE LOAD	36.2	115.0	114.2
	MAX. B.M.	19.84	17.56	15.37
	AT X = (m)	1.28	0.60	0.60
	MAX DEFLECTION	6.00	1.23	1.18
	AT X = (m)	1.58	3.15	3.60
80	SPACING (m)	0.44	1.36	1.14
	MAX. TIE LOAD	36.9	114.5	114.7
	MAX. B.M.	19.84	18.06	16.38
	AT X = (m)	1.28	0.60	0.60
	MAX DEFLECTION	6.00	1.28	1.40
	AT X = (m)	1.58	3.15	3.60

Distance X is from base of wall.

Copyright in bezit van S.G.B. Group Limited, Mitcham, Surrey. Vermenigvuldiging of mededeling aan derden in welke vorm dan ook, is zonder schriftelijke toestemming van eigenares niet geoorloofd.
Copyright est la propriété de S.G.B. Group Limited, Mitcham, Surrey. La reproduction ou la communication à des tiers, sous quelque forme que ce soit n'est permise qu'avec l'autorisation écrite du propriétaire.
Copyright ist Eigentum der S.G.B. Ltd., Mitcham, Surrey. Vervielfältigung oder Bekanntgabe an Dritte, in welcher Form auch, ohne schriftliche Genehmigung der Eigentümerin nicht gestattet.
Copyright owned by S.G.B. Group Limited, Mitcham, Surrey. Reproduction or disclosure to third parties in any form whatsoever is not allowed without the written consent of the proprietors. © Copyright S.G.B. Group Limited 19

SGB GROUP p.l.c.
WILLOW LANE MITCHAM
SURREY Tel. 01-648 3400

MK II STEEL SOLDIER SYSTEM

SOLDIER SPACING AND TIE LOAD TABLES FOR 4.275m FORMS

Ref No. J29
Page No. 46
Date January 1984
GROUP RESEARCH AND DEVELOPMENT DIVISION

Concrete Pressure kN/m²		3 TIES	4 TIES	5 TIES
40	SPACING (m)	2.00	2.00	2.00
	MAX. TIE LOAD	108.6	102.50	76.6
	B.M. AT JOINT	4.64	7.58	3.88
	MAX. B.M. (kN.m)	14.40	11.56	7.70
	AT X = (m)	0.60	2.10	3.30
50	SPACING (m)	1.75	1.94	2.00
	MAX. TIE LOAD	114.9	114.8	89.8
	B.M. AT JOINT	4.26	7.47	3.88
	MAX. B.M. (kN.m)	15.75	12.30	7.70
	AT X = (m)	0.60	2.10	3.30
60	SPACING (m)	1.54	1.82	2.00
	MAX. TIE LOAD	114.5	114.5	95.1
	B.M. AT JOINT	3.70	6.88	3.92
	MAX. B.M. (kN.m)	16.63	11.94	7.70
	AT X = (m)	0.60	2.10	3.30
70	SPACING (m)	1.31	1.80	2.00
	MAX. TIE LOAD	114.5	114.5	97.5
	B.M. AT JOINT	3.06	6.79	3.92
	MAX. B.M.(kN.m)	16.51	11.92	7.70
	AT X = (m)	0.60	2.10	3.30
80	SPACING (m)	1.15	1.73	2.00
	MAX. TIE LOAD	114.7	114.6	101.5
	B.M. AT JOINT	2.68	6.55	3.92
	MAX. B.M. (kN.m)	16.56	11.33	7.70
	AT X = (m)	0.60	2.10	3.30

The following deflections are the worst case for tie patterns used.

3 TIES = 0.97mm away from wall
4 TIES = 0.66mm into wall
5 TIES = 0.53mm away from wall

Distance X is from base of the wall.

Copyright in bezit van S.G.B. Group Limited, Mitcham, Surrey. Vermenigvuldiging of mededeling aan derden in welke vorm dan ook, is zonder schriftelijke toestemming van eigenares niet geoorloofd.
Copyright est la propriété de S.G.B. Group Limited, Mitcham, Surrey. La reproduction ou la communication à des tiers, sous quelque forme que ce soit n'est permise qu'avec l'autorisation écrite du propriétaire.
Copyright ist Eigentum der S.G.B. Limited, Mitcham, Surrey. Vervielfältigung oder Bekanntgabe an Dritte, in welcher Form auch, ohne schriftliche Genehmigung der Eigentümerin nicht gestattet.
Copyright owned by S.G.B. Group Limited, Mitcham, Surrey. Reproduction or disclosure to third parties in any form whatsoever is not allowed without the written consent of the proprietors. © Copyright S.G.B. Group Limited 19

SGB GROUP p.l.c.
WILLOW LANE MITCHAM
SURREY Tel. 01-648 3400

MK II STEEL SOLDIER SYSTEM

SOLDIER SPACING AND TIE LOAD GRAPHS FOR 4.275m FORMS

Ref No. J29
Page No. 45
Date January 1984

GROUP RESEARCH AND DEVELOPMENT DIVISION

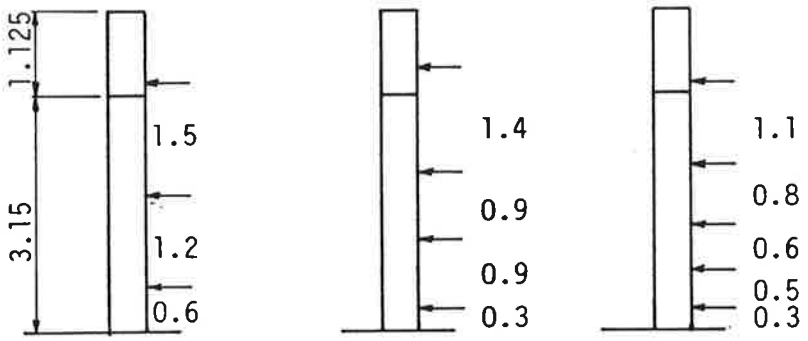

3 TIES 4 TIES 5 TIES

Soldiers may be spaced at 2.0m centres for a Concrete Pressure of 40 to 80 kN/m^2 with the 5 Tie arrangement shown above.

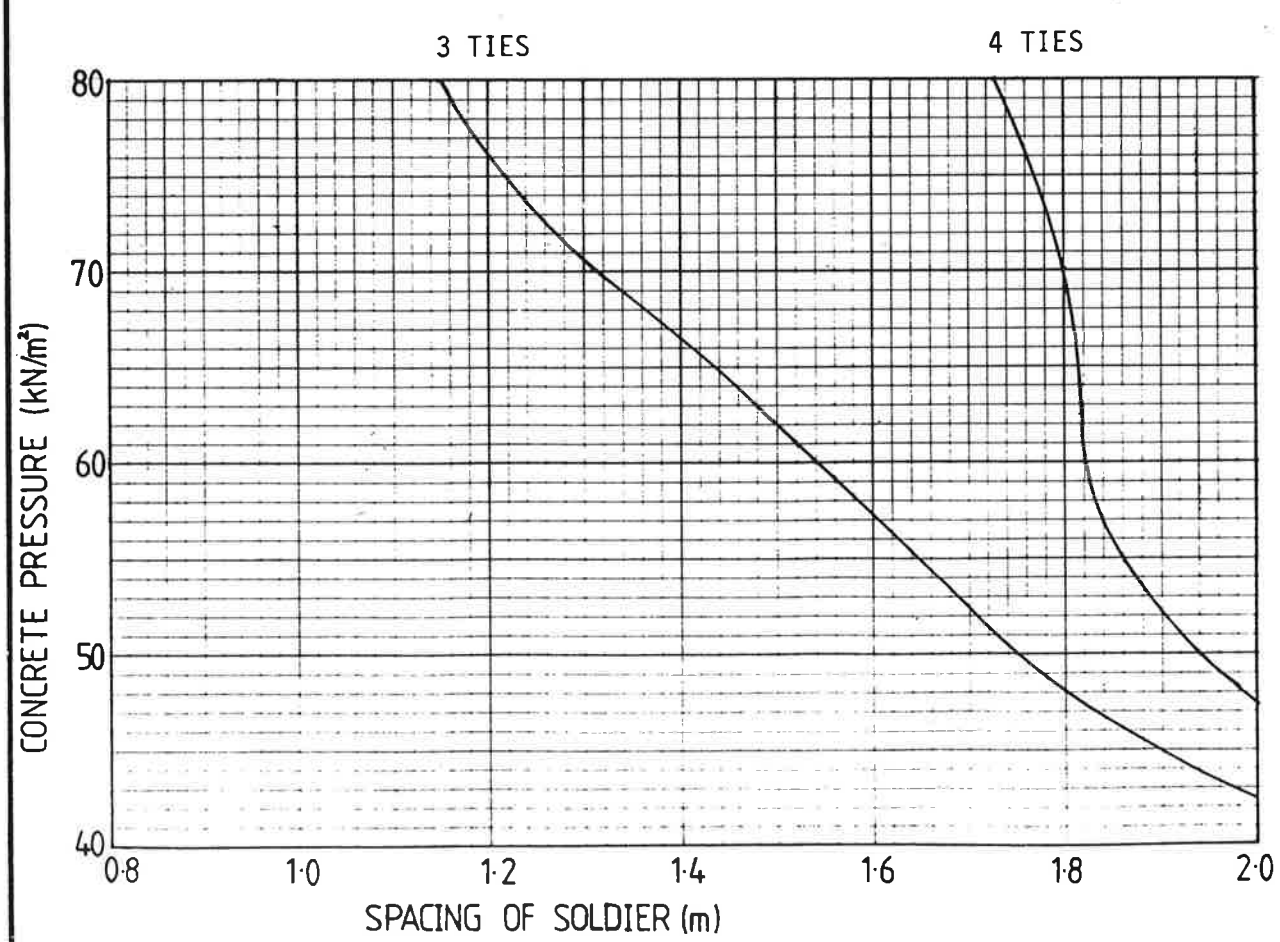

See also Table on the following page

Copyright in bezit van S.G.B. Group Limited, Mitcham, Surrey. Vermenigvuldiging of mededeling aan derden in welke vorm dan ook, is zonder schriftelijke toestemming van eigeneres niet geoorloofd.

Copyright est la propriété de S.G.B. Group Limited, Mitcham, Surrey. La reproduction ou la communication à des tiers, sous quelque forme que ce soit n'est permise qu'avec l'autorisation écrite du propriétaire.

Copyright ist eigentum. S.G.B. Limited, Mitcham, Surrey. Vervielfältigung oder Bekanntgabe an Dritte, in welcher Form auch, ohne schriftliche Genehmigung der Eigentümerin nicht gestattit.

Copyright owned by S.G.B. Group Limited, Mitcham, Surrey. Reproduction or disclosure to third parties in any form whatsoever is not allowed without the written consent of the proprietors. © Copyright S.G.B. Group Limited 19

SGB GROUP p.l.c.
WILLOW LANE MITCHAM
SURREY Tel. 01-648 3400

MK II STEEL SOLDIER SYSTEM

SOLDIER SPACING AND TIE LOAD GRAPHS FOR 4.95m FORMS

Ref No. J29
Page No. 47
Date January 1984
GROUP RESEARCH AND DEVELOPMENT DIVISION

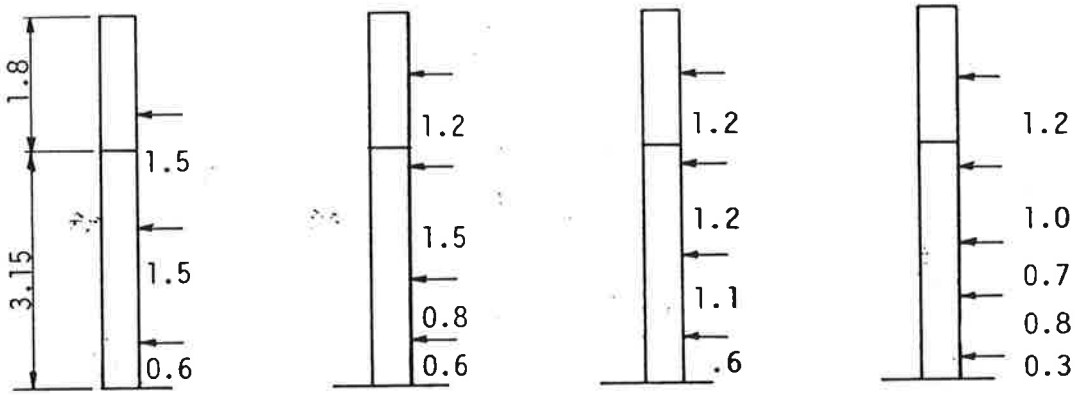

3 TIES | 4 TIES (A) | 4 TIES (B) | 5 TIES

NOTE: When using 4 ties.

If concrete pressure < 60 kN/m^2 use Tie arrangement (A)
If concrete pressure > 60 kN/m^2 use Tie arrangement (B)

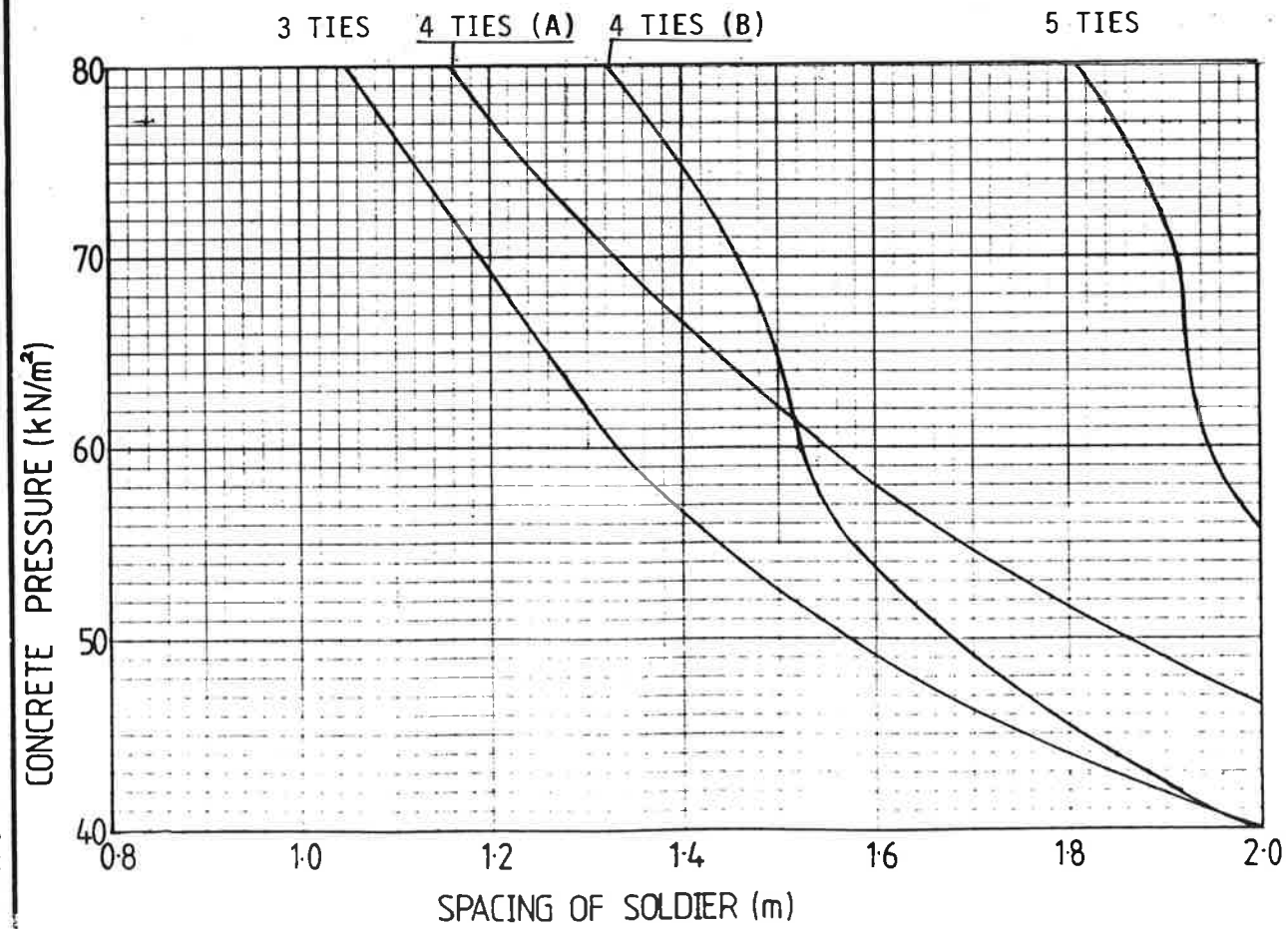

See also Table on the following page

Copyright in bezit van S.G.B. Group Limited, Mitcham, Surrey. Vermenigvuldiging of mededeling aan derden in welke vorm dan ook, is zonder schriftelijke toestemming van eigenares niet geoorloofd.

Copyright est la propriété de S.G.B. Group Limited, Mitcham, Surrey. La reproduction ou la communication à des tiers, sous quelque forme que ce soit n'est permise qu'avec l'autorisation écrite du propriétaire.

Copyright ist in Besitz von S.G.B. Group Limited, Mitcham, Surrey. Vervielfältigung oder Bekanntgabe an Dritte, in welcher Form auch, ohne schriftliche Genehmigung der Eigentümerin nicht gestattet.

Copyright owned by S.G.B. Group Limited, Mitcham, Surrey. Reproduction or disclosure to third parties in any form whatsoever is not allowed without the written consent of the proprietors. © Copyright S.G.B. Group Limited 19

SGB GROUP p.l.c.
WILLOW LANE MITCHAM
SURREY Tel. 01-648 3400

MK II STEEL SOLDIER SYSTEM

SOLDIER SPACING AND TIE LOAD TABLES FOR 4.95 m FORMS

GROUP RESEARCH AND DEVELOPMENT DIVISION

Concrete Pressure kN/m²		3 TIES	4 TIES (A)	4 TIES (B)	5 TIES
40	SPACING (m)	2.00	2.00	1.98	2.00
	MAX. TIE LOAD	114.5	100.4	114.5	91.6
	B.M. AT JOINT	3.94	2.28	3.72	3.24
	MAX. B.M. (kN.m)	20.46	14.40	14.26	8.64
	AT X = (m)	3.60	0.60	0.60	2.80
50	SPACING (m)	1.57	1.86	1.67	2.00
	MAX. TIE LOAD	114.8	114.7	114.5	108.5
	B.M. AT JOINT	5.06	1.60	4.41	3.22
	MAX. B.M. (kN.m)	16.06	16.74	15.03	9.92
	AT X = (m)	3.60	0.60	0.60	2.80
60	SPACING (m)	1.33	1.55	1.52	1.95
	MAX. TIE LOAD	115.0	114.5	114.6	114.4
	B.M. AT JOINT	4.57	1.85	5.34	2.65
	MAX. B.M. (kN.m)	14.36	16.74	16.42	10.40
	AT X = (m)	0.60	0.60	0.60	2.80
70	SPACING (m)	1.19	1.33	1.46	1.91
	MAX. TIE LOAD	114.8	114.8	115.0	114.6
	B.M. AT JOINT	3.77	1.86	5.93	2.39
	MAX. B.M. (kN.m)	14.99	16.76	18.40	10.49
	AT X = (m)	0.60	0.60	0.60	2.80
80	SPACING (m)	1.05	1.16	1.32	1.81
	MAX. TIE LOAD	114.9	114.9	114.5	114.8
	B.M. AT JOINT	2.96	1.60	5.62	2.28
	MAX. B.M. (kN.m)	15.12	16.70	19.01	9.92
	AT X = (m)	0.60	0.60	0.60	2.80

The following deflections are the worst case for the tie pattern used.

3 TIES = 3.77mm away from wall
4 TIES (A) = 1.00mm away from wall
4 TIES (B) = 1.46mm away from wall
5 TIES = 0.33mm away from wall

Distance X is from base of the wall.

Copyright owned by S.G.B. Group Limited, Mitcham, Surrey. Reproduction or disclosure to third parties in any form whatsoever is not allowed without the written consent of the proprietors. © Copyright S.G.B Group Limited 19

Copyright ist Eigentum v... S.G.B. Limited, Mitcham, Surrey. Vervielfältigung oder Bekanntgabe an Dritte, in welcher Form auch, ohne schriftliche Genehmigung der Eigentümerin nicht gestattet.

Copyright est la propriété de S.G.B. Group Limited, Mitcham, Surrey. La reproduction ou la communication à des tiers, sous quelque forme que ce soit n'est permise qu'avec l'autorisation écrite du propriétaire.

Copyright in bezit van S.G.B. Group Limited, Mitcham, Surrey. Vermenigvuldiging of mededeling aan derden in welke vorm dan ook, is zonder schriftelijke toestemming van eigenares niet geoorloofd.

SGB GROUP p.l.c.
WILLOW LANE MITCHAM
SURREY Tel. 01-648 3400

MK II STEEL SOLDIER SYSTEM

SOLDIER SPACING AND TIE LOAD GRAPHS FOR 5.4m FORMS

Ref No. J29
Page No. 49
Date January 1984
GROUP RESEARCH AND DEVELOPMENT DIVISION

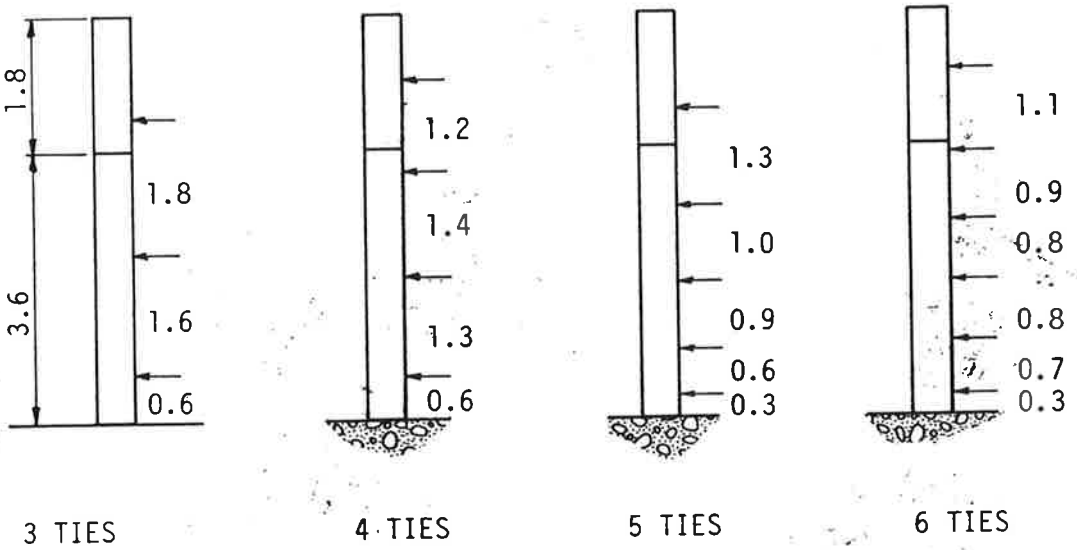

3 TIES 4 TIES 5 TIES 6 TIES

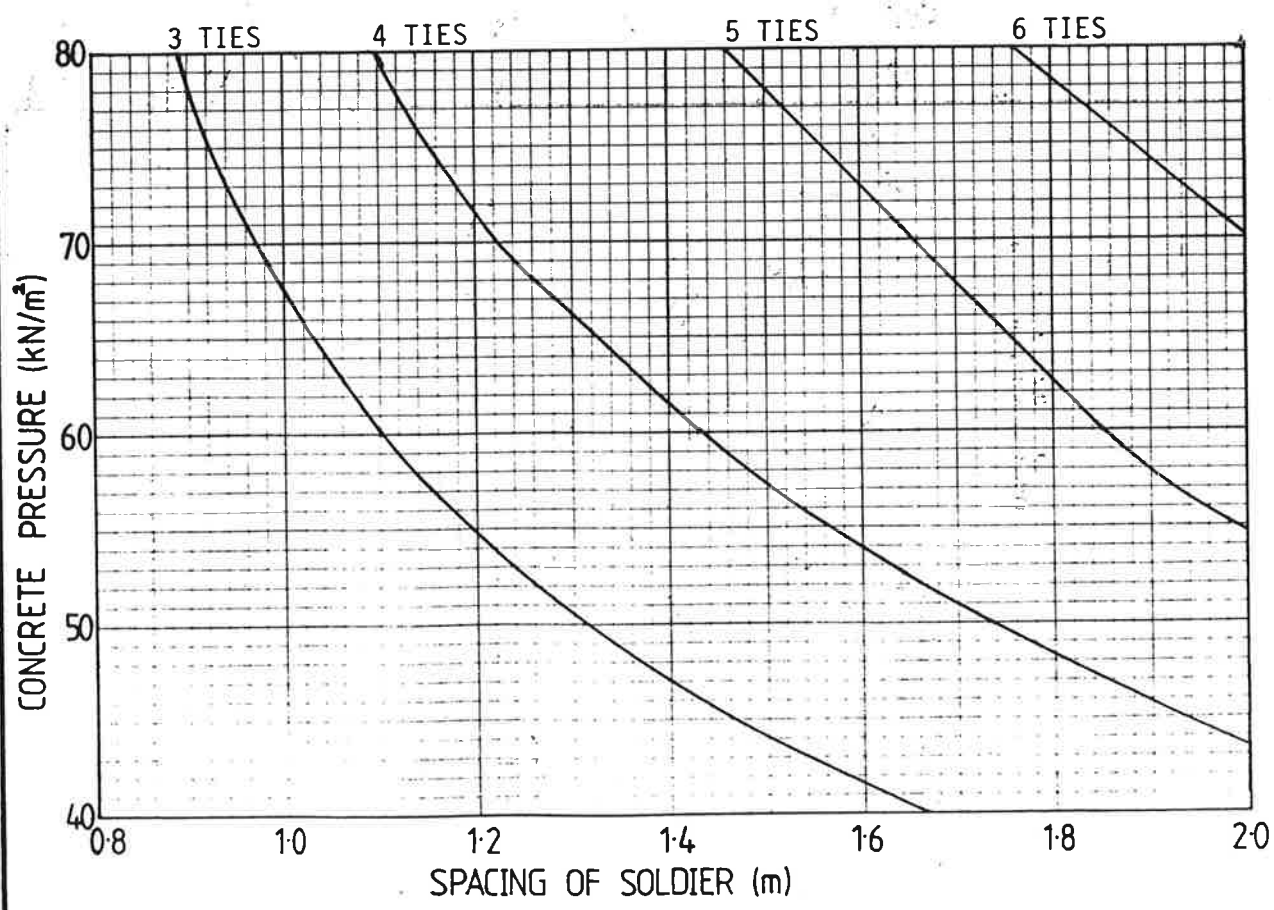

See also Table on the following page

Copyright owned by S.G.B. Group Limited, Mitcham, Surrey. Reproduction or disclosure to third parties in any form whatsoever is not allowed without the written consent of the proprietors. © Copyright S.G.B. Group Limited 19

Copyright ist Eigentum der S.G.B. Limited, Mitcham, Surrey. Vervielfältigung oder Bekanntgabe an Dritte, in welcher Form auch, ohne schriftliche Genehmigung der Eigentümerin nicht gestattet.

Copyright est la propriété de S.G.B. Group Limited, Mitcham, Surrey. La reproduction ou la communication à des tiers, sous quelque forme que ce soit n'est permise qu'avec l'autorisation écrite du propriétaire.

Copyright in bezit van S.G.B. Group Limited, Mitcham, Surrey. Vermenigvuldiging of mededeling aan derden in welke vorm dan ook, is zonder schriftelijke toestemming van eigeneres niet geoorloofd.

SGB GROUP p.l.c.
WILLOW LANE MITCHAM
SURREY Tel. 01-648 3400

MK II STEEL SOLDIER SYSTEM

SOLDIER SPACING AND TIE LOAD TABLES FOR 5.4m FORMS

Ref No. J29
Page No. 50
Date January 1984

GROUP RESEARCH AND DEVELOPMENT DIVISION

Concrete Pressure kN/m²		3 TIES	4 TIES	5 TIES	6 TIES
40	SPACING (m)	1.67	2.00	2.00	2.00
	MAX. TIE LOAD	114.4	106.8	100.9	81.7
	B.M. AT JOINT	4.56	2.00	2.32	7.00
	MAX. B.M. (kN.m)	19.06	14.40	18.28	7.00
	AT X = (m)	4.00	0.60	4.10	3.50
50	SPACING (m)	1.31	1.73	2.00	2.00
	MAX. TIE LOAD	114.5	114.8	108.1	92.3
	B.M. AT JOINT	6.13	2.58	3.88	7.66
	MAX. B.M. (kN.m)	16.41	15.57	18.28	7.66
	AT X = (m)	2.20	0.60	4.10	3.50
60	SPACING (m)	1.10	1.43	1.85	2.00
	MAX. TIE LOAD	114.7	114.6	114.8	100.3
	B.M. AT JOINT	6.02	3.09	3.68	8.00
	MAX. B.M. (kN.m)	16.43	15.44	16.91	8.00
	AT X = (m)	2.20	0.60	4.10	3.50
70	SPACING (m)	0.97	1.23	1.66	2.00
	MAX. TIE LOAD	114.6	114.4	114.5	113.5
	B.M. AT JOINT	5.34	3.13	3.12	7.96
	MAX. B.M. (kN.m)	16.12	15.50	15.17	7.96
	AT X = (m)	2.20	0.60	4.10	3.50
80	SPACING (m)	0.89	1.10	1.46	1.76
	MAX. TIE LOAD	114.1	114.0	114.7	114.6
	B.M. AT JOINT	4.65	2.85	2.67	6.93
	MAX. B.M. (kN.m)	15.82	15.84	13.34	7.62
	AT X = (m)	2.20	0.60	4.10	1.80

The following deflections are the worst case for the tie pattern used.

3 TIES = 2.68mm away from wall
4 TIES = 0.81mm away from wall
5 TIES = 3.09mm away from wall
6 TIES = 0.14mm away from wall

Distance X is from base of the wall.

Copyright in bezit van S.G.B. Group Limited, Mitcham, Surrey. Vermenigvuldiging of mededeling aan derden in welke vorm den ook, is zonder schriftelijke toestemming van eigenares niet geoorloofd.

Copyright est la propriété de S.G.B. Group Limited, Mitcham, Surrey. La reproduction ou la communication à des tiers, sous quelque forme que ce soit n'est permise qu'avec l'autorisation écrite du propriétaire.

Copyright ist Eigentum der S.G.B. Limited, Mitcham, Surrey. Vervielfältigung oder Bekanntgabe an Dritte, in welcher Form auch, ohne schriftliche Genehmigung der Eigentümerin nicht gestattet.

Copyright owned by S.G.B. Group Limited, Mitcham, Surrey. Reproduction or disclosure to third parties in any form whatsoever is not allowed without the written consent of the proprietors. © Copyright S.G.B. Group Limited 19

SGB GROUP p.l.c.
WILLOW LANE MITCHAM
SURREY Tel. 01-648 3400

MK II STEEL SOLDIER SYSTEM

SOLDIER SPACING AND TIE LOAD GRAPHS FOR 6.3m FORMS

Ref No. J29
Page No. 51
Date January 1984

GROUP RESEARCH AND DEVELOPMENT DIVISION

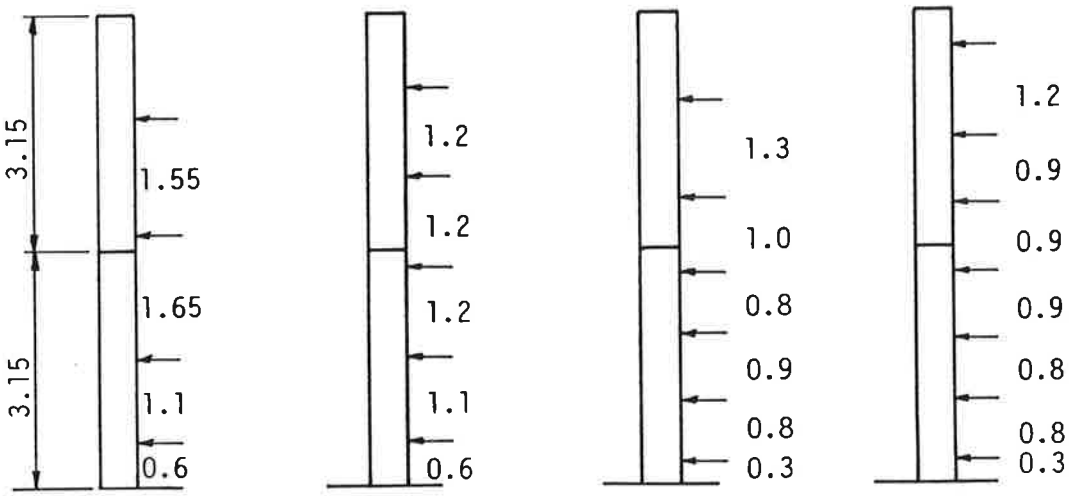

4 TIES 5 TIES 6 TIES 7 TIES

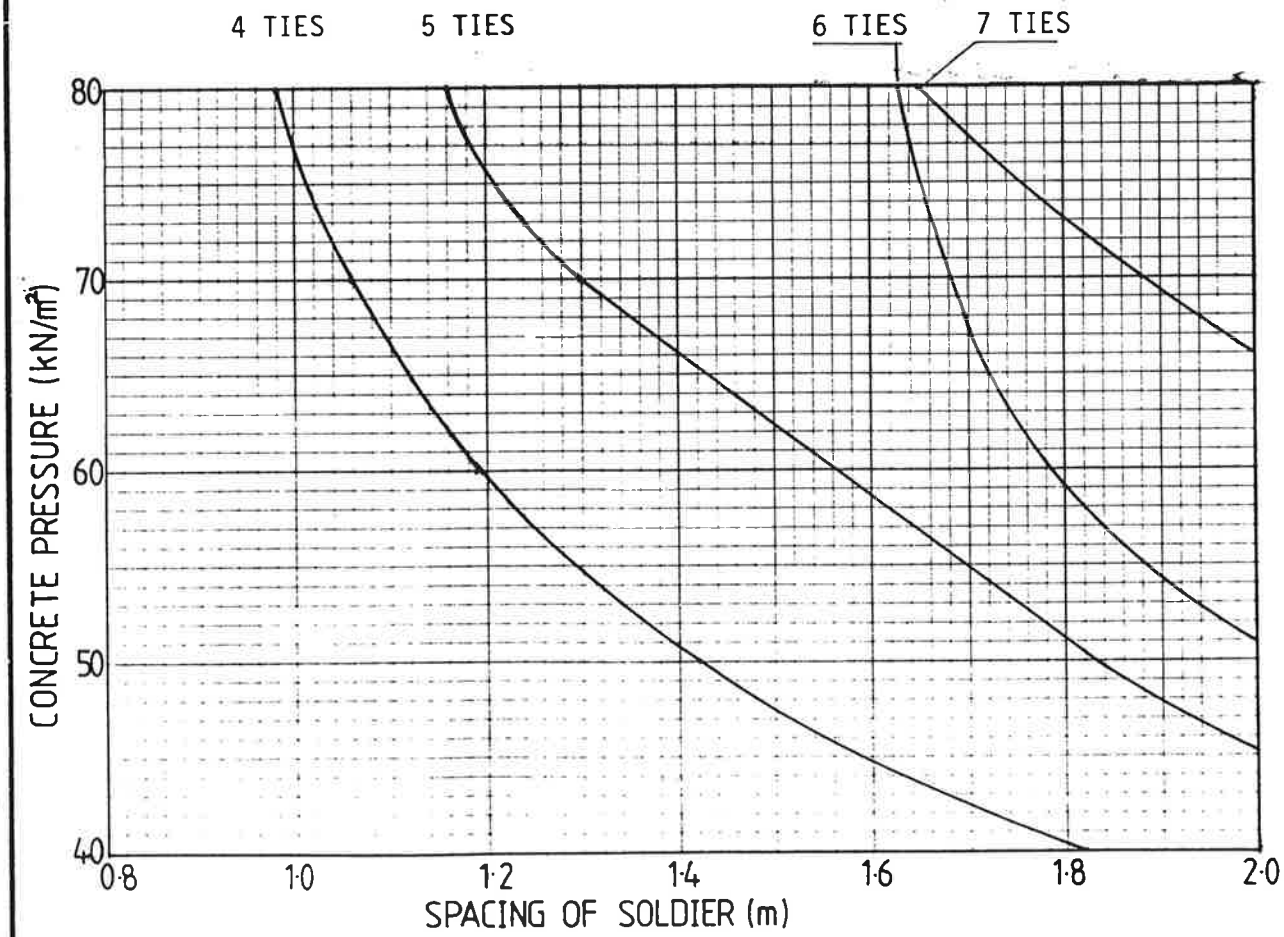

See also Table on the following page

Copyright owned by S.G.B. Group Limited, Mitcham, Surrey. Reproduction or disclosure to third parties in any form whatsoever is not allowed without the written consent of the proprietors. © Copyright S.G.B. Group Limited 19

Copyright ist Eigentum der S.G.B. Limited, Mitcham, Surrey. Vervielfältigung oder Bekanntgabe an Dritte, in welcher Form auch, ohne schriftliche Genehmigung der Eigentümerin nicht gestattet.

Copyright est la propriété de S.G.B. Group Limited, Mitcham, Surrey. La reproduction ou la communication à des tiers, sous quelque forme que ce soit n'est permise qu'avec l'autorisation écrite du propriétaire.

Copyright in bezit van S.G.B. Group Limited, Mitcham, Surrey. Vermenigvuldiging of mededeling aan derden in welke vorm dan ook, is zonder schriftelijke toestemming van eigenares niet geoorloofd.

SGB GROUP p.l.c.
WILLOW LANE MITCHAM
SURREY Tel. 01-648 3400

MK II STEEL SOLDIER SYSTEM

SOLDIER SPACING AND TIE LOAD TABLES FOR 6.3m FORMS

GROUP RESEARCH AND DEVELOPMENT DIVISION

Concrete Pressure kN/m²		4 TIES	5 TIES	6 TIES	7 TIES
40	SPACING (m)	1.82	2.00	2.00	2.00
	MAX. TIE LOAD	114.4	99.5	90.5	86.2
	B.M. AT JOINT	5.59	2.30	3.34	3.28
	MAX. B.M. (kN.m)	20.77	14.40	14.38	8.10
	AT X = (m)	4.90	0.60	5.10	4.50
50	SPACING (m)	1.42	1.83	2.00	2.00
	MAX. TIE LOAD	114.5	114.5	113.5	94.5
	B.M. AT JOINT	6.12	2.69	4.14	3.94
	MAX. B.M. (kN.m)	16.20	16.47	14.38	8.62
	AT X = (m)	4.90	0.60	5.10	4.50
60	SPACING (m)	1.19	1.51	1.78	2.00
	MAX. TIE LOAD	114.5	114.5	115.0	104.8
	B.M. AT JOINT	6.08	2.75	4.61	4.72
	MAX. B.M. (kN.m)	15.21	16.31	12.80	8.80
	AT X = (m)	3.35	0.60	5.10	4.50
70	SPACING (m)	1.06	1.30	1.68	1.88
	MAX. TIE LOAD	114.8	114.7	115.0	114.5
	B.M. AT JOINT	5.73	2.73	5.28	5.36
	MAX. B.M. (kN.m)	15.12	16.38	12.08	8.20
	AT X = (m)	3.35	0.60	5.10	2.70
80	SPACING (m)	0.98	1.16	1.63	1.65
	MAX. TIE LOAD	114.2	114.6	114.8	114.6
	B.M. AT JOINT	5.39	2.33	5.61	5.28
	MAX. B.M. (kN.m)	15.18	16.71	11.72	8.19
	AT X = (m)	3.35	0.60	5.10	2.70

The following deflections are the worst case for the tie pattern used.

4 TIES = 4.37mm away from wall
5 TIES = 1.03mm away from wall
6 TIES = 1.80mm away from wall
7 TIES = 0.31mm away from wall

Distance X is from base of the wall.

Copyright in bezit van S.G.B. Group Limited, Mitcham, Surrey. Vermenigvuldiging of mededeling aan derden in welke vorm dan ook, is zonder schriftelijke toestemming van eigenares niet geoorloofd.

Copyright est la propriété de S.G.B. Group Limited, Mitcham, Surrey. La reproduction ou la communication à des tiers, sous quelque forme que ce soit n'est permise qu'avec l'autorisation écrite du propriétaire.

Copyright ist Eigentum von S.G.B. Limited, Mitcham, Surrey. Vervielfältigung oder Bekanntgabe an Dritte, in welcher Form auch, ohne schriftliche Genehmigung der Eigentümerin nicht gestattet.

Copyright owned by S.G.B. Group Limited, Mitcham, Surrey. Reproduction or disclosure to third parties in any form whatsoever is not allowed without the written consent of the proprietors. © Copyright S.G.B. Group Limited 19

SGB GROUP p.l.c
WILLOW LANE MITCHAM
SURREY Tel. 01-648 3400

MK II STEEL SOLDIER SYSTEM

SOLDIER SPACING AND TIE LOAD GRAPHS FOR 7.2m FORMS

Ref No. J29
Page No. 53
Date January 1984
GROUP RESEARCH AND DEVELOPMENT DIVISION

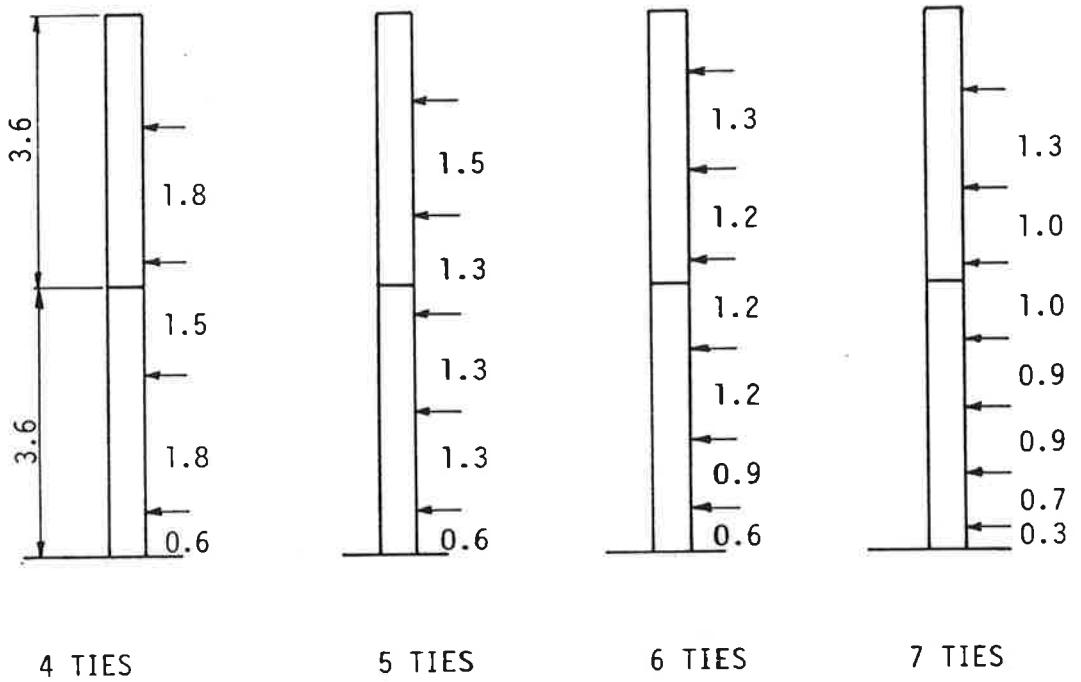

4 TIES 5 TIES 6 TIES 7 TIES

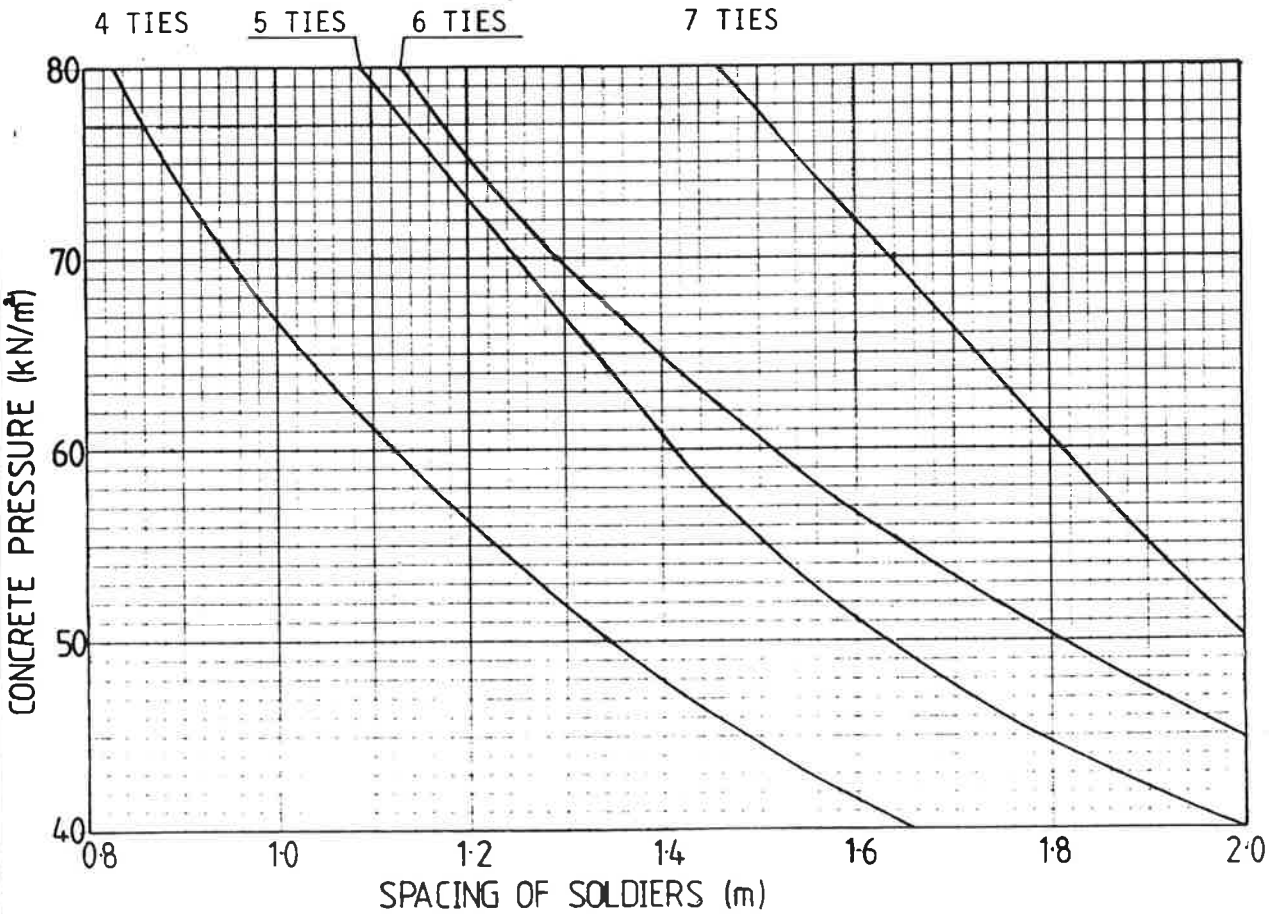

See also table on the following page

Copyright owned by S.G.B. Group Limited, Mitcham, Surrey. Reproduction or disclosure to third parties in any form whatsoever is not allowed without the written consent of the proprietors. © Copyright S.G.B. Group Limited 19

Copyright ist Eigentum ... S.G.B. Limited, Mitcham, Surrey. Vervielfältigung oder Bekanntgabe an Dritte, in welcher Form auch, ohne schriftliche Genehmigung der Eigentümerin nicht gestattet.

Copyright est la propriété de S.G.B. Group Limited, Mitcham, Surrey. La reproduction ou la communication à des tiers, sous quelque forme que ce soit n'est permise qu'avec l'autorisation écrite du propriétaire.

Copyright in bezit van S.G.B. Group Limited, Mitcham, Surrey. Vermenigvuldiging of mededeling aan derden in welke vorm dan ook, is zonder schriftelijke toestemming van eigenares niet geoorloofd.

SGB GROUP p.l.c.
WILLOW LANE MITCHAM
SURREY Tel. 01-648 3400

MK II STEEL SOLDIER SYSTEM

SOLDIER SPACING AND TIE LOAD TABLES FOR 7.2 FORMS

Ref No. J29
Page No. 54
Date January 1984

GROUP RESEARCH AND DEVELOPMENT DIVISION

Concrete Pressure kN/m²		4 TIES	5 TIES	6 TIES	7 TIES
40	SPACING (m)	1.66	2.00	2.00	2.00
	MAX. TIE LOAD	114.8	112.6	104.3	92.4
	B.M. AT JOINT	1.91	4.56	2.86	2.34
	MAX. B.M. (kN.m)	23.29	14.40	14.40	11.06
	AT X = (m)	5.70	0.60	0.60	6.10
50	SPACING (m)	1.34	1.63	1.81	2.00
	MAX. TIE LOAD	114.7	114.9	115.0	113.3
	B.M. AT JOINT	2.32	4.64	3.03	2.88
	MAX. B.M. (kN.m)	18.80	14.67	16.29	11.06
	AT X = (m)	5.70	0.60	0.60	6.10
60	SPACING (m)	1.12	1.41	1.51	1.81
	MAX. TIE LOAD	114.9	114.8	114.8	114.5
	B.M. AT JOINT	2.48	5.02	2.87	2.93
	MAX. B.M. (kN.m)	16.46	15.23	16.31	10.55
	AT X = (m)	2.40	0.60	0.60	4.80
70	SPACING (m)	0.95	1.25	1.29	1.64
	MAX. TIE LOAD	114.2	114.5	114.5	114.6
	B.M. AT JOINT	2.03	5.47	2.90	2.97
	MAX. B.M. (kN.m)	16.42	15.75	16.25	9.97
	AT X = (m)	2.40	0.60	0.60	4.80
80	SPACING (m)	0.83	1.09	1.12	1.46
	MAX TIE LOAD	115.0	114.8	114.2	114.6
	B.M. AT JOINT	2.03	5.66	3.17	3.15
	MAX. B.M. (kN.m)	16.62	15.70	16.13	9.29
	AT X = (m)	2.40	0.60	0.60	3.80

The following deflections are the worst case for the tie pattern used.

4 TIES = 4.50mm away from wall
5 TIES = 1.06mm away from wall
6 TIES = 1.11mm away from wall
7 TIES = 0.85mm away from wall

Distance X is from base of the wall.

Copyright in bezit van S.G.B. Group Limited, Mitcham, Surrey. Vermenigvuldiging of mededeling aan derden in welke vorm dan ook, is zonder schriftelijke toestemming van eigenares niet geoorloofd.

Copyright est la propriété de S.G.B. Group Limited, Mitcham, Surrey. La reproduction ou la communication à des tiers, sous quelque forme que ce soit n'est permise qu'avec l'autorisation écrite du propriétaire.

Copyright ist Eigentum v. S.G.B. Limited, Mitcham, Surrey. Vervielfältigung oder Bekanntgabe an Dritte, in welcher Form auch, ohne schriftliche Genehmigung der Eigentümerin nicht gestattet.

Copyright owned by S.G.B. Group Limited, Mitcham, Surrey. Reproduction or disclosure to third parties in any form whatsoever is not allowed without the written consent of the proprietors. © Copyright S.G.B. Group Limited 19

SGB GROUP p.l.c.
WILLOW LANE MITCHAM
SURREY Tel. 01-648 3400

MK II STEEL SOLDIER SYSTEM
— SHORING SYSTEM —
INTRODUCTION

Ref No. J29
Page No. 60
Date October 1984
GROUP RESEARCH AND DEVELOPMENT DIVISION

The Shoring System utilises the Mk II Steel Soldier, together with the appropriate accessories to make a system which provides vertical, horizontal and raking or inclined shoring. The shores may be used singly or in groups, each shore having a maximum load capacity of 100 kN, depending on length and application.

Possible applications include back propping, supporting precast units, temporary support during steelwork erection, supporting concentrated loads, horizontal trench strutting and support to wall formwork.

The main components are the Mk II Steel Soldier, the Threaded Shoring Adaptor, fitted with a threaded jack and captive nut to give fine adjustment and the Tubular Shoring Adaptor, fitted with a plain jack to give a coarse adjustment using a number of preset holes and pin fixing.

A range of accessories is shown on the following pages to complement the system and which can be used in various combinations to suit a particular job or site condition.

Adjustment of the Shores

Horizontal and Raking Shores

When used as a raking shore to support wall forms made from other Mk II Soldiers the make up for the length of shore required can be selected from the tables on pages 80 onwards.

One Threaded and one Tubular Shoring Adaptor are used on the ends of the raking shore. The top end of the shore is fixed to a soldier using a pair of Web Bearing Plates and the Heavy Duty Push/Pull Prop Adaptor. The bottom end is secured to a firm foundation using the Swivel Shoring Base. Normally the Tubular Type is used at the top and the Threaded Type is used at the bottom. The Tubular Type should be adjusted to the setting required before connection. Final adjustment is made by turning the nut on the Threaded Type.

Vertical Shores

The procedure for setting up vertical shores is very similar. Having selected the make up for the length required the length of the Tubular Type is set so that finally the extension of the Tubular Type and the Threaded Type at the other end will be about equal. Normally the Tubular Type will be used at the top of a shore.

If vertical shores are used in groups, they may be laced and braced together to increase their load carrying capacity.

Copyright owned by S.G.B. Group p.l.c. Mitcham, Surrey. Reproduction or disclosure to third parties in any form whatsoever is not allowed without the written consent of the proprietors. © Copyright S.G.B. Group p.l.c. 19
Copyright est la propriété de S.G.B. Group p.l.c. Mitcham, Surrey. La reproduction ou la communication à des tiers, sous quelque forme que ce soit n'est permise qu'avec l'autorisation écrite du propriétaire.
Copyright ist Eigentum der S.G.B. Group p.l.c. Mitcham, Surrey. Vervielfältigung oder Bekanntgabe an Dritte, in welcher Form auch, ohne schriftliche Genehmigung der Eigentümerin nicht gestattet.
Copyright in bezit van S.G.B. Group p.l.c. Mitcham, Surrey. Vermenigvuldiging of mededeling aan derden in welke vorm dan ook, is zonder schriftelijke toestemming van eigenares niet geoorloofd.

SGB GROUP p.l.c.
WILLOW LANE MITCHAM
SURREY Tel. 01-648 3400

MK II STEEL SOLDIER SYSTEM
— SHORING SYSTEM —
DETAILS OF ANCILLARY COMPONENTS

Ref No. 129
Page No. 61
Date October 1984

GROUP RESEARCH AND DEVELOPMENT DIVISION

Threaded Shoring Adaptor

Code No: 4430/38
Weight: 8.50 kg

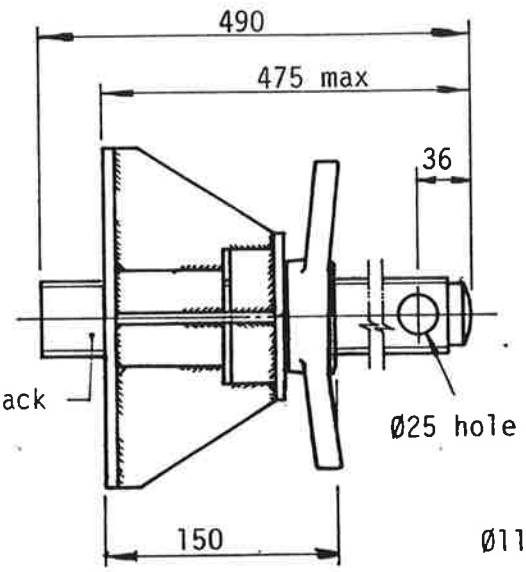

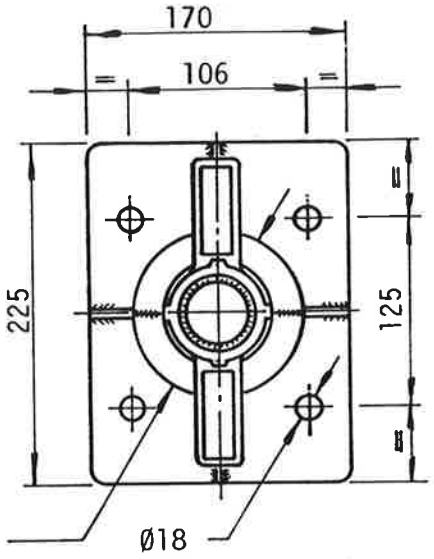

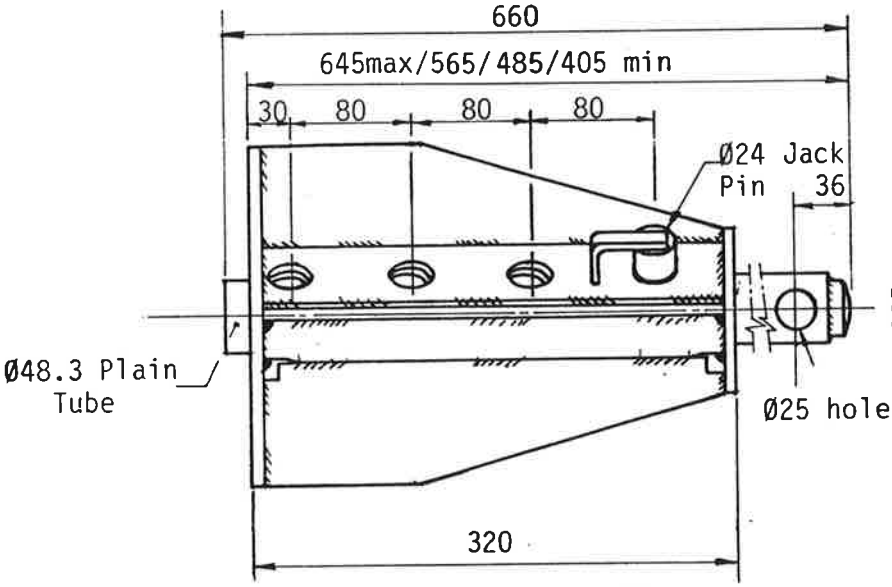

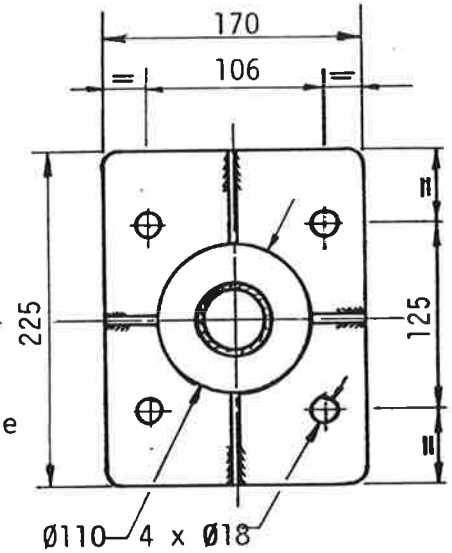

N.B. Jack Pin is supplied with safety clip

Tubular Shoring Adaptor

Code No: 4430/37
Weight: 12.95 kg

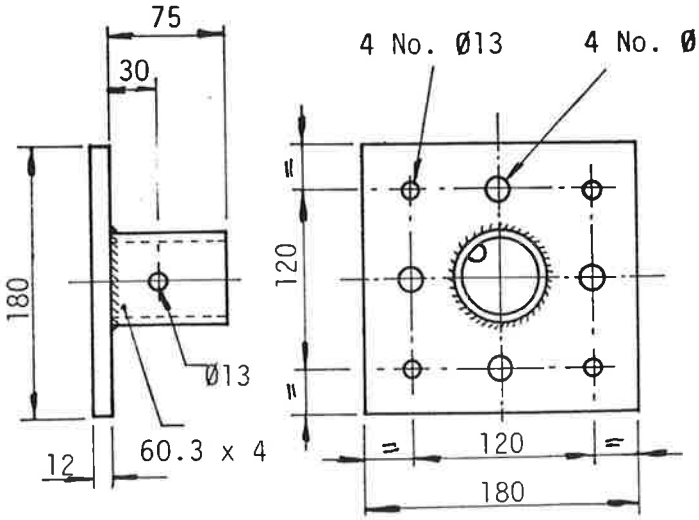

Head/Base Plate

Code No: 4430/22
Weight No: 3.4 kg

(See also page 71)

Copyright in bezit van S.G.B. Group p.l.c. Mitcham, Surrey. Vermenigvuldiging of mededeling aan derden in welke vorm dan ook, is zonder schriftelijke toestemming van eigenares niet geoorloofd.
Copyright est la propriété de S.G.B. Group p.l.c. Mitcham, Surrey. La reproduction ou la communication à des tiers, sous quelque forme que ce soit n'est permise qu'avec l'autorisation écrite du propriétaire.
Copyright ist Eigentum der S.G.B. Group p.l.c. Mitcham, Surrey. Vervielfältigung oder Bekanntgabe an Dritte, in welcher Form auch, ohne schriftliche Genehmigung der Eigentümerin nicht gestattet.
Copyright owned by S.G.B. Group p.l.c. Mitcham, Surrey. Reproduction or disclosure to third parties in any form whatsoever is not allowed without the written consent of the proprietors. © Copyright S.G.B. Group p.l.c. 19

SGB GROUP p.l.c.
WILLOW LANE MITCHAM
SURREY Tel. 01-648 3400

MK II STEEL SOLDIER SYSTEM
— SHORING SYSTEM —
DETAILS OF ANCILLARY COMPONENTS

Ref No. J29
Page No. 61A
Date November 1984
GROUP RESEARCH AND DEVELOPMENT DIVISION

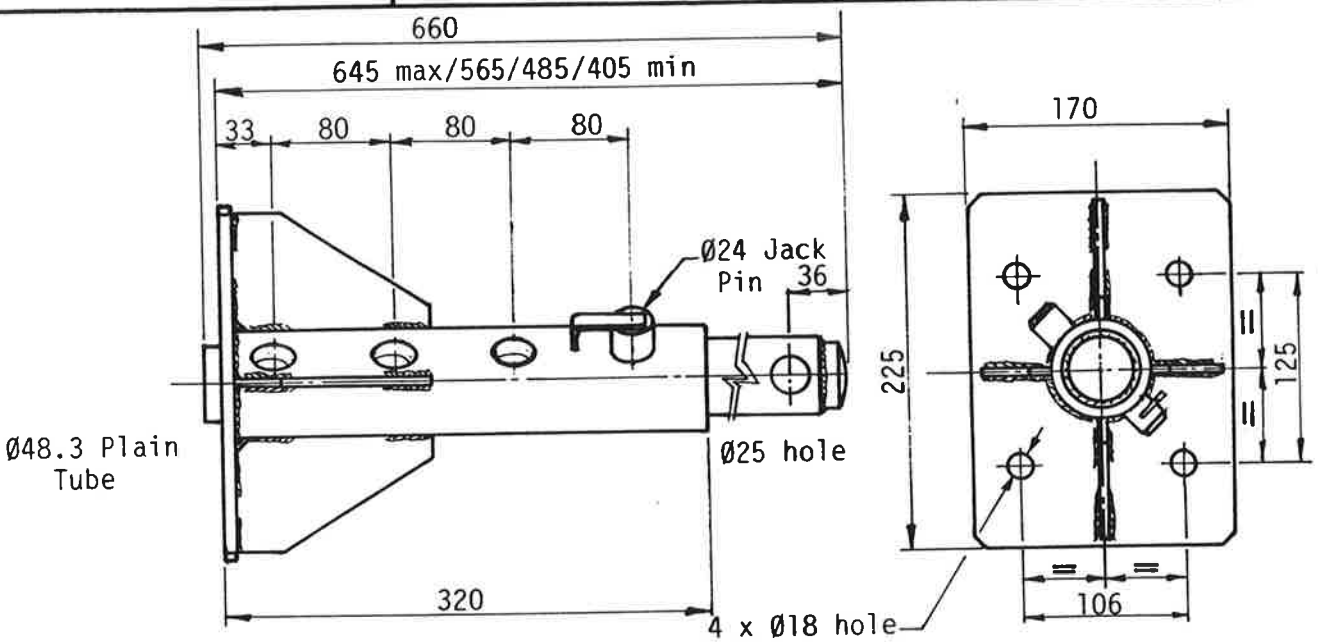

Tubular Shoring Adaptor

Code No: 4430/37
Weight: 12.0 kg

As from January 1985 the tubular shoring adaptor to the design as shown on page 61 will be supplemented by the design shown on this page. However, the principle O/A dimensions have not altered. Therefore the tables giving the ranges of adjustability and working loads will also apply to this design.

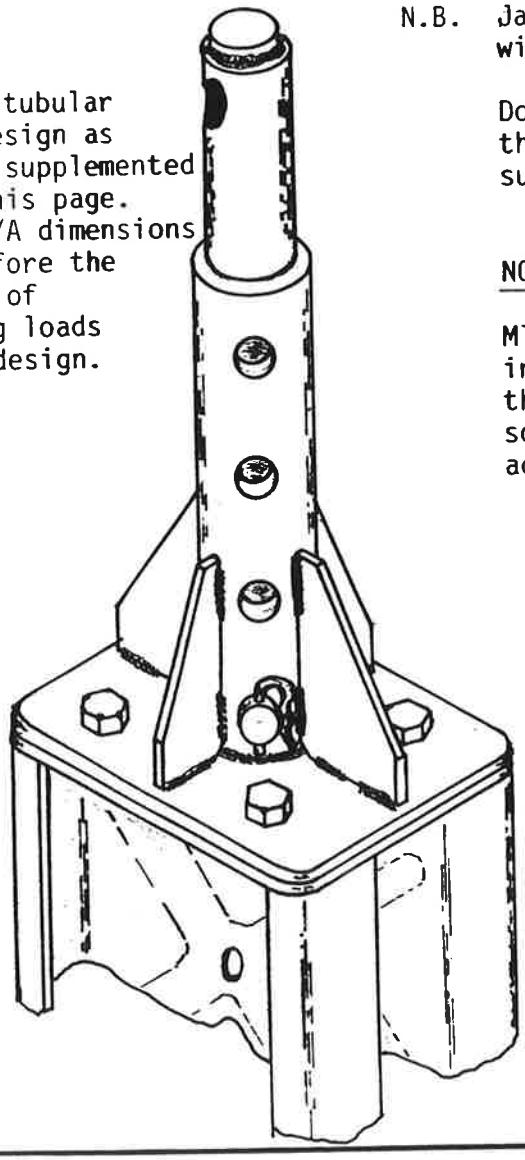

N.B. Jack Pin is supplied with safety clip.

Do NOT use anything other than a pin of the type supplied.

NOTE:

M16 Set Screws must be inserted as shown in the diagram (i.e. set screw head on shoring adaptor).

Copyright owned by S.G.B. Group p.l.c. Mitcham, Surrey. Reproduction or disclosure to third parties in any form whatsoever is not allowed without the written consent of the proprietors. © Copyright S.G.B Group p.l.c. 19

Copyright ist Eigentum der S.G.B. Group p.l.c. Mitcham, Surrey. Vervielfältigung oder Bekanntgabe an Dritte, in welcher Form auch, ohne schriftliche Genehmigung der Eigentümerin nicht gestattet.

Copyright est la propriété de S.G.B. Group p.l.c. Mitcham, Surrey. La reproduction ou la communication à des tiers, sous quelque forme que ce soit n'est permise qu'avec l'autorisation écrite du propriétaire.

Copyright in bezit van S.G.B. Group p.l.c. Mitcham, Surrey. Vermenigvuldiging of mededeling aan derden in welke vorm dan ook, is zonder schriftelijke toestemming van eigenares niet geoorloofd.

SGB GROUP p.l.c.
WILLOW LANE MITCHAM
SURREY Tel. 01-648 3400

MK II STEEL SOLDIER SYSTEM
— SHORING SYSTEM —

DETAILS OF
ANCILLARY COMPONENTS

Ref No. J29
Page No. 62
Date January 1985
GROUP RESEARCH AND DEVELOPMENT DIVISION

Swivel Shoring Base

Code No: 4430/24
Weight: 5.0 kg

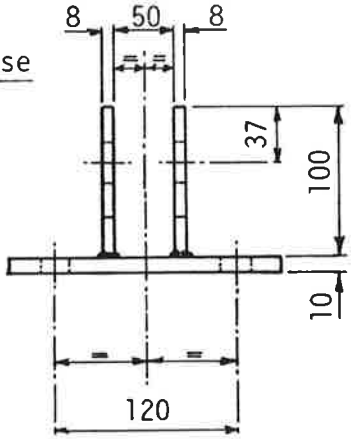

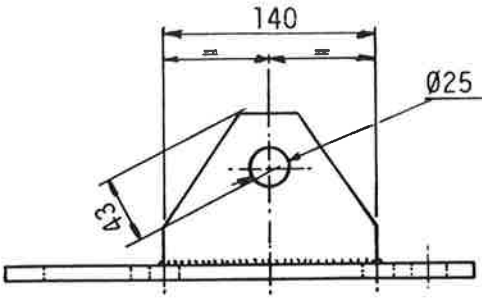

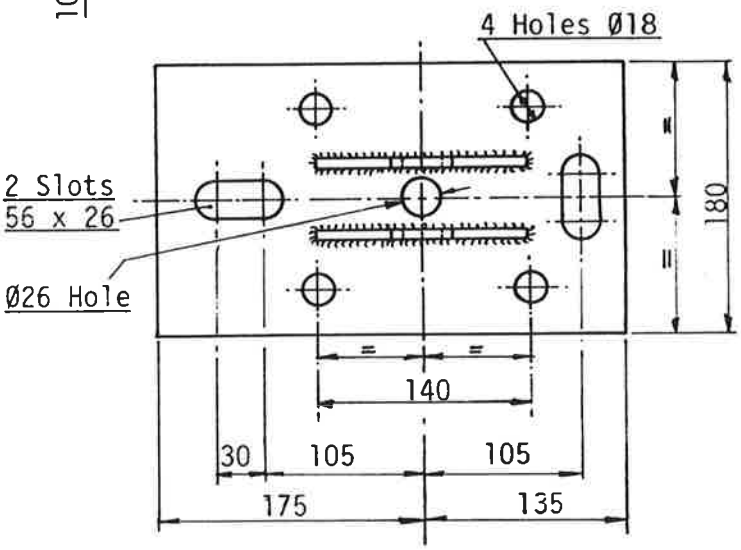

(See also pages 71 & 83)

Forkhead

Code No: 4430/18
Weight: 5.2 kg

(See also pages 71, 74 and 81)

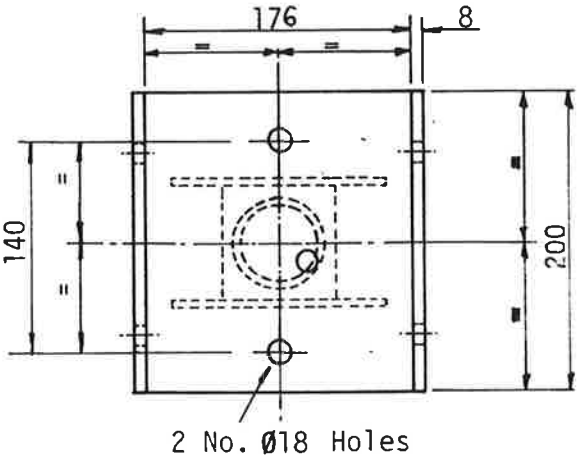

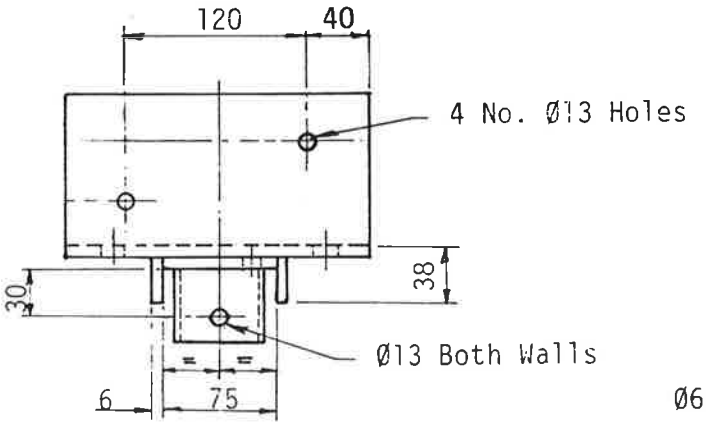

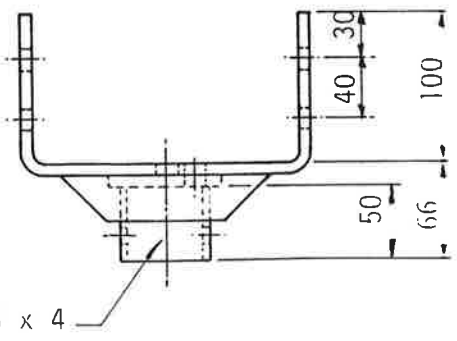

Copyright owned by S.G.B. Group p.l.c. Mitcham, Surrey. Reproduction or disclosure to third parties in any form whatsoever is not allowed without the written consent of the proprietors. ©Copyright S.G.B. Group p.l.c. 19

Copyright ist Eigentum der S.G.B. Group p.l.c. Mitcham, Surrey. Vervielfältigung oder Bekanntgabe an Dritte, in welcher Form auch, ohne schriftliche Genehmigung der Eigentümerin nicht gestattet.

Copyright est la propriété de S.G.B. Group p.l.c. Mitcham, Surrey. La reproduction ou la communication à des tiers, sous quelque forme que ce soit n'est permise qu'avec l'autorisation écrite du propriétaire.

Copyright in bezit van S.G.B. Group p.l.c. Mitcham, Surrey. Vermenigvuldiging of mededeling aan derden in welke vorm dan ook, is zonder schriftelijke toestemming van eigenares niet geoorloofd.

Copyright in bezit van S.G.B. Group p.l.c. Mitcham, Surrey. Vermenigvuldiging of mededeling aan derden in welke vorm dan ook, is zonder schriftelijke toestemming van eigenares niet geoorloofd.

Copyright est la propriété de S.G.B. Group p.l.c. Mitcham, Surrey. La reproduction ou la communication à des tiers, sous quelque forme que ce soit n'est permise qu'avec l'autorisation écrite du propriétaire.

Copyright ist Eigentum der S.G.B. Group p.l.c. Mitcham, Surrey. Vervielfältigung oder Bekanntgabe an Dritte, in welcher Form auch, ohne schriftliche Genehmigung der Eigentümerin nicht gestattet.

Copyright owned by S.G.B. Group p.l.c. Mitcham, Surrey. Reproduction or disclosure to third parties in any form whatsoever is not allowed without the written consent of the proprietors. ©Copyright S.G.B. Group p.l.c. 19

Web Bearing Plates

Code No: 4430/26
Weight/Plate: 0.6 Kg

To be used in pairs and fitted in the lightening holes of the soldier with 2 No. M12 x 80 bolts and nuts.

May be used in conjunction with H.D. Push Pull Prop Adaptor (for detail see page 72) or with the Standard Push Pull Prop Adaptor see page 23.

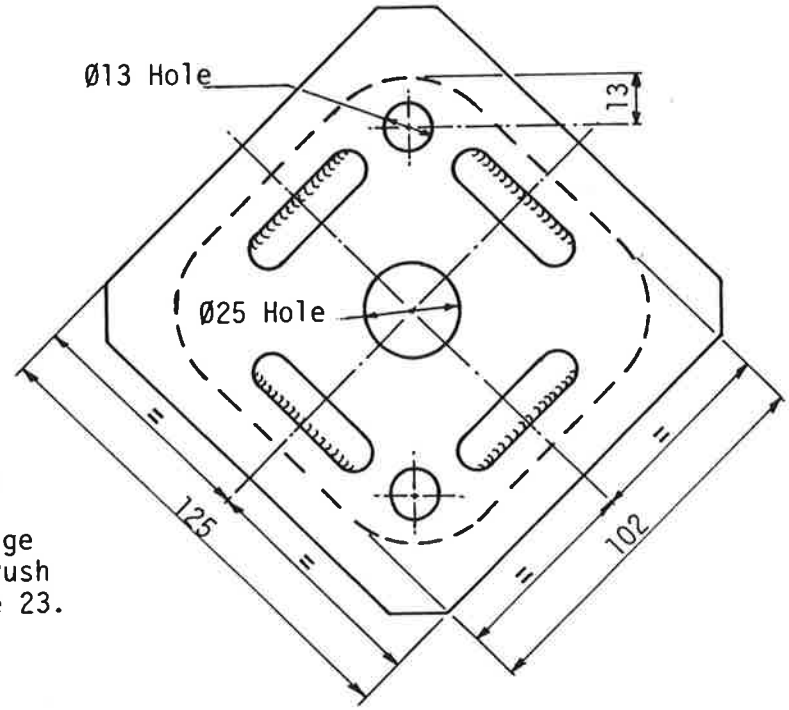

Heavy Duty Push Pull Prop Adaptor

Code No: 4430/25
Weight: 6.80Kg
(See page 72)

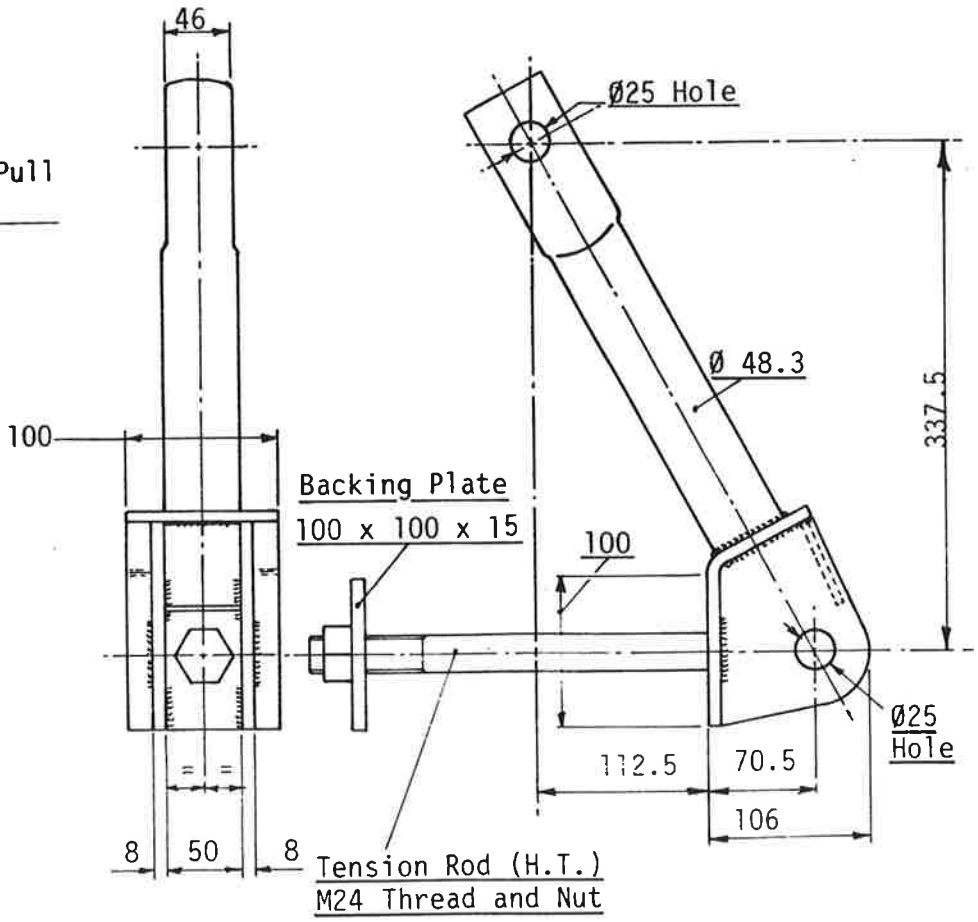

Copyright S.G.B. Group p.l.c. Mitcham, Surrey. Reproduction or disclosure to third parties in any form whatsoever is not allowed without the written consent of the proprietors. ©Copyright S.G.B. Group p.l.c. 1984

Soldier: 0.45m
Code No: 4430/07
Weight: 11.65 kg

The 0.45m Soldier is used in conjunction with the standard range of Soldiers, to obtain various lengths of Shore
(See pages 80 - 84 Height Make Up Schedule)

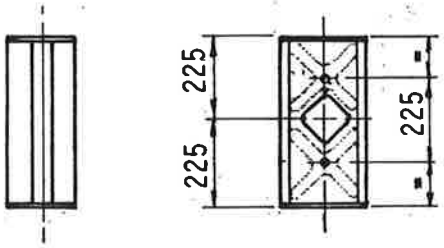

Mk 2 Trench Support Plate

Code No: 4430/33
Weight: 6.6 kg

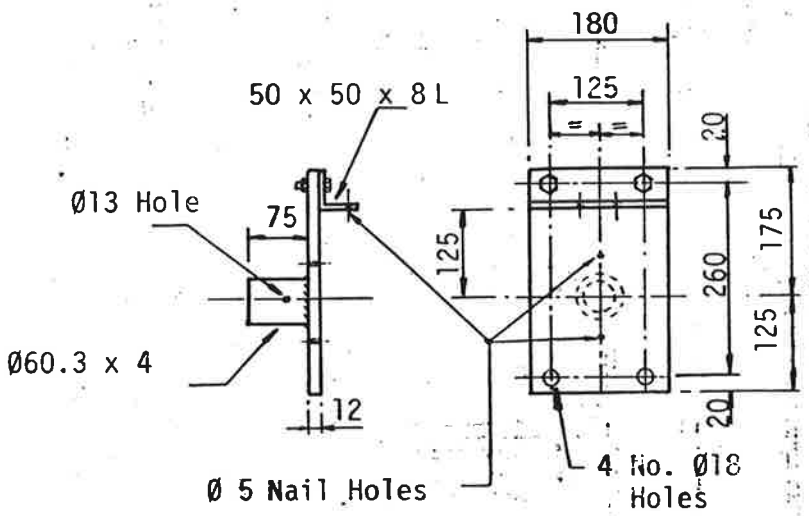

The 50 x 50 x 8 angle may be fixed to the Trench Support Plate in either set of holes, making it suitable for use with different sized walings (see page 73)

See also page 73

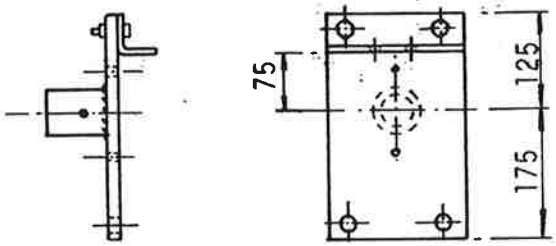

Alternative fixing position of 50 x 50 x 8 Angle

SGB GROUP p.l.c.
WILLOW LANE MITCHAM
SURREY Tel. 01-648 3400

MK II STEEL SOLDIER SYSTEM
— SHORING SYSTEM —
DETAILS OF
ANCILLARY COMPONENTS

Ref No. J29
Page No. 65
Date July 1984
GROUP RESEARCH AND DEVELOPMENT DIVISION

Mk II Soldier Bracing Coupler

Code No: 4430/35
Weight: 3.9 kg

The Soldier Coupler is fixed to the flanges of the C Sections using the U Clamps and Bolts. Once in position a tube may be fixed horizontally (90° to Vertical Soldier) using the Half Coupler.

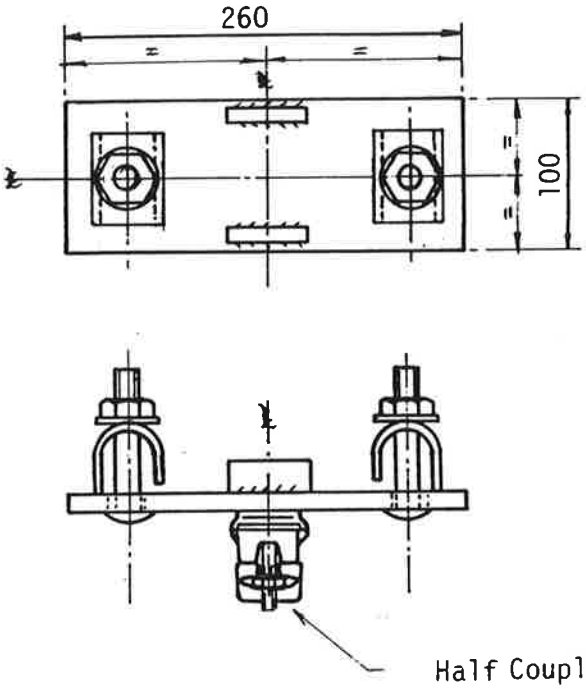

Copyright in bezit van S.G.B. Group p.l.c. Mitcham, Surrey. Vermenigvuldiging of mededeling aan derden in welke vorm dan ook, is zonder schriftelijke toestemming van eigenares niet geoorloofd.

Copyright est la propriété de S.G.B. Group p.l.c. Mitcham, Surrey. La reproduction ou la communication à des tiers, sous quelque forme que ce soit n'est permise qu'avec l'autorisation écrite du propriétaire.

Copyright ist Eigentum der S.G.B. Group p.l.c. Mitcham, Surrey. Vervielfältigung oder Bekanntgabe an Dritte, in welcher Form auch, ohne schriftliche Genehmigung der Eigentümerin nicht gestattet.

Copyright owned by S.G.B. Group p.l.c. Mitcham, Surrey. Reproduction or disclosure to third parties in any form whatsoever is not allowed without the written consent of the proprietors. © Copyright S.G.B. Group p.l.c. 19

SGB GROUP p.l.c.
WILLOW LANE MITCHAM
SURREY Tel. 01-648 3400

MK II STEEL SOLDIER SYSTEM
— SHORING SYSTEM —
USE OF ANCILLARY COMPONENTS

GROUP RESEARCH AND DEVELOPMENT DIVISION

Copyright in bezit van S.G.B. Group p.l.c. Mitcham, Surrey. Vermenigvuldiging of mededeling aan derden in welke vorm dan ook, is zonder schriftelijke toestemming van eigenares niet geoorloofd.

Copyright est la propriété de S.G.B. Group p.l.c. Mitcham, Surrey. La reproduction ou la communication à des tiers, sous quelque forme que ce soit n'est permise qu'avec l'autorisation écrite du propriétaire.

Copyright ist Eigentum der S.G.B. Group p.l.c. Mitcham, Surrey. Vervielfältigung oder Bekanntgabe an Dritte, in welcher Form auch, ohne schriftliche Genehmigung der Eigentümerin nicht gestattet.

Threaded Shoring Adaptor

Code No: 4430/38
Weight: 8.50 kg

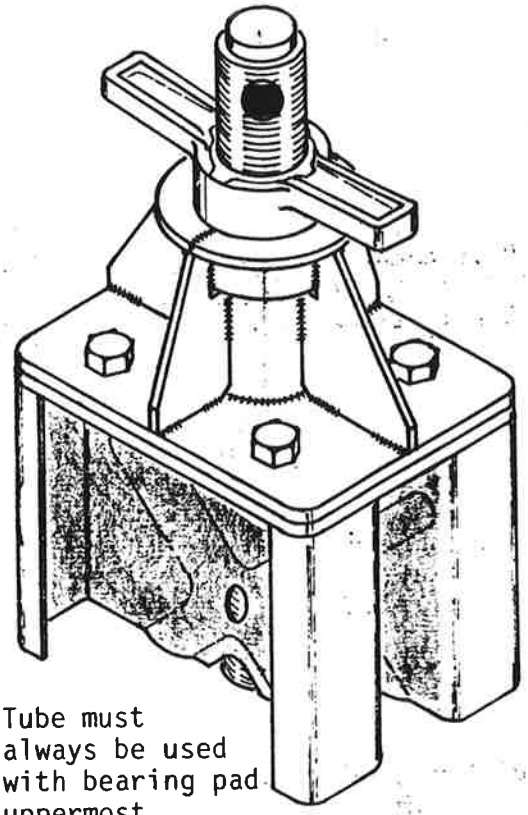

Tubular Shoring Adaptor

Code No: 4430/37
Weight: 12.95 kg

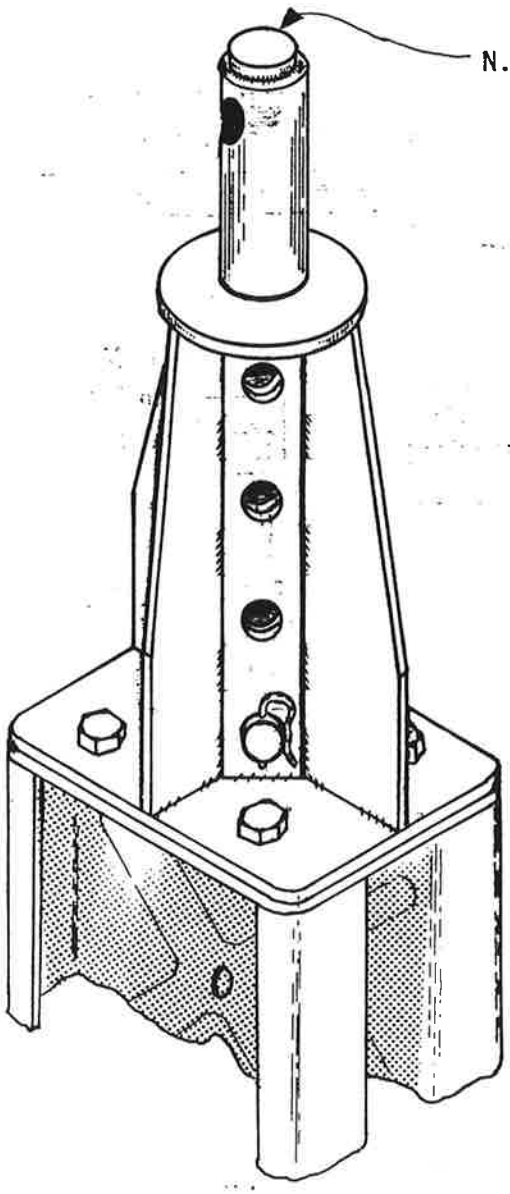

N.B. Tube must always be used with bearing pad uppermost

The Shoring Adaptor is fixed to the End Plates of the Soldier using 4 No. M16 x 35 Grade 8.8 set screws and nuts, thus enabling the Soldier to be used as a raking or vertical shore, singularly or in groups on level or sloping ground.

Soldiers thus converted may also be used horizontally for trench and cofferdam work, back propping, supporting concentrated loads and precast units. For details of safe working loads see page 90.

NOTE

M16 Set Screws must be inserted as shown in the diagram (i.e. setscrew head on shoring adaptor).

The pin of the Tubular Shoring Adaptor is secured with a spring clip

Do NOT use anything other than a pin of the type supplied.

Copyright owned by S.G.B. Group p.l.c. Mitcham, Surrey. Reproduction or disclosure to third parties in any form whatsoever is not allowed without the written consent of the proprietors. ©Copyright S.G.B. Group p.l.c. 19

SGB GROUP p.l.c.
WILLOW LANE MITCHAM
SURREY Tel. 01-648 3400

MK II STEEL SOLDIER SYSTEM
— SHORING SYSTEM —
USE OF ANCILLARY COMPONENTS

Ref No. J29
Page No. 71
Date January 1985
GROUP RESEARCH AND DEVELOPMENT DIVISION

Use of Forkhead (See also page 74)

Code No: 4430/18
Weight: 5.2 kg

The Forkhead may be secured to the tube using M12 x 80 bolt with self locking nut.
(Do not use for shore in tension)
(For dimensions see page 62)
(For extension details see pages 80 - 85)

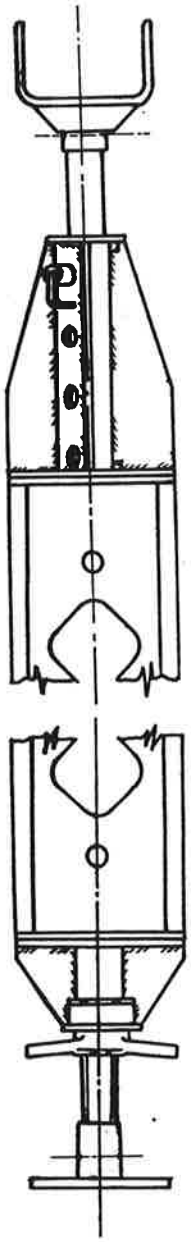

Use of Head/Base Plate

Code No: 4430/22
Weight: 3.4 kg

May be secured to jack using M12 x 80 Bolt and self locking nut.
Do not use for shore in tension.

(For dimensions see page 61)
(For extension details see pages 80 - 85)

Use of Swivel Shoring Base

Code No: 4430/24

Normally anchored in outer 25mm slots using 2 No. H.T. M24 Bolts (Grade 8.8)

Alternative use 4 No. H.T. M16 Bolts (Grade 8.8)

(For dimensions see page 62)

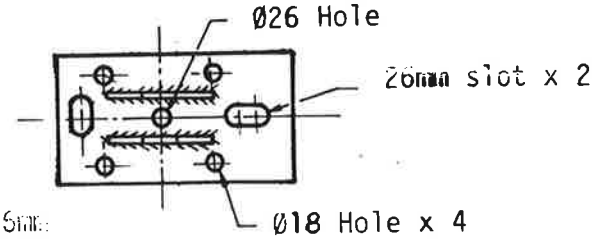

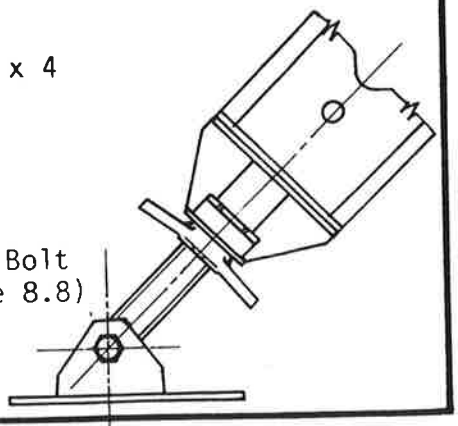

Copyright in bezit van S.G.B. Group p.l.c. Mitcham, Surrey. Vermenigvuldiging of mededeling aan derden in welke vorm dan ook, is zonder schriftelijke toestemming van eigenares niet geoorloofd.
Copyright est la propriété de S.G.B. Group p.l.c. Mitcham, Surrey. La reproduction ou la communication à des tiers, sous quelque forme que ce soit n'est permise qu'avec l'autorisation écrite du propriétaire.
Copyright ist Eigentum der S.G.B. Group p.l.c. Mitcham, Surrey. Vervielfältigung oder Bekanntgabe an Dritte, in welcher Form auch, ohne schriftliche Genehmigung der Eigentümerin nicht gestattet.
Copyright owned by S.G.B. Group p.l.c. Mitcham, Surrey. Reproduction or disclosure to third parties in any form whatsoever is not allowed without the written consent of the proprietors. ©Copyright S.G.B. Group p.l.c. 19

SGB GROUP p.l.c.
WILLOW LANE MITCHAM
SURREY Tel. 01-648 3400

MK II STEEL SOLDIER SYSTEM
— SHORING SYSTEM —
USE OF ANCILLARY COMPONENTS

GROUP RESEARCH AND DEVELOPMENT DIVISION

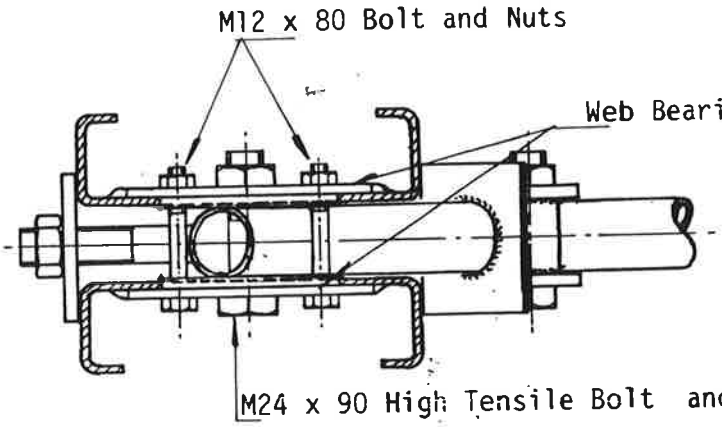

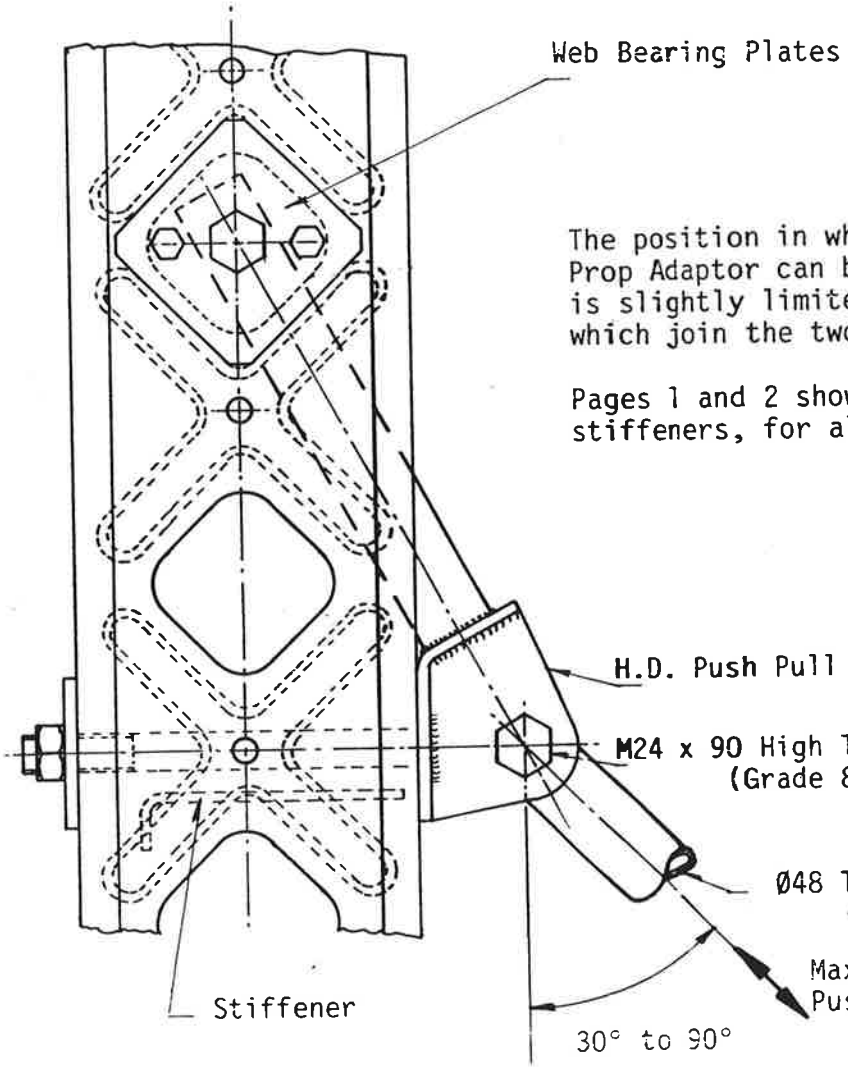

The position in which the H.D. Push Pull Prop Adaptor can be fixed to the Soldier is slightly limited by the stiffeners which join the two C Sections of the Soldier.

Pages 1 and 2 show the positions of the stiffeners, for all soldier lengths.

NOTE:

H.D. Push Pull Prop Adaptor to be located between Web Bearing Plates BEFORE Nuts and Bolts are tightened.

Copyright owned by S.G.B. Group p.l.c. Mitcham, Surrey. Reproduction or disclosure to third parties in any form whatsoever is not allowed without the written consent of the proprietors. ©Copyright S.G.B. Group p.l.c. 19

Copyright ist Eigentum der S.u.d. Group p.l.c. Mitcham, Surrey. Vervielfältigung oder Bekanntgabe an Dritte, in welcher Form auch, ohne schriftliche Genehmigung der Eigentümerin nicht gestattet.

Copyright est la propriété de S.u.d. Group p.l.c. Mitcham, Surrey. La reproduction ou la communication à des tiers, sous quelque forme que ce soit n'est permise qu'avec l'autorisation écrite du propriétaire.

Copyright in bezit van S.G.B. Group p.l.c. Mitcham, Surrey. Vermenigvuldiging of mededeling aan derden in welke vorm dan ook, is zonder schriftelijke toestemming van eigenaars niet geoorloofd.

SGB GROUP p.l.c.
WILLOW LANE MITCHAM
SURREY Tel. 01-648 3400

MK II STEEL SOLDIER SYSTEM

—— SHORING SYSTEM ——

USE OF ANCILLARY COMPONENTS

Ref No. J29
Page No. 73
Date October 1984

GROUP RESEARCH AND DEVELOPMENT DIVISION

Use of Trench Support Plate

Code No: 4430/33
Weight: 6.6 kg

The Trench Support Plate is used to support the Shore from the walings and is particularly useful when releasing the shore.

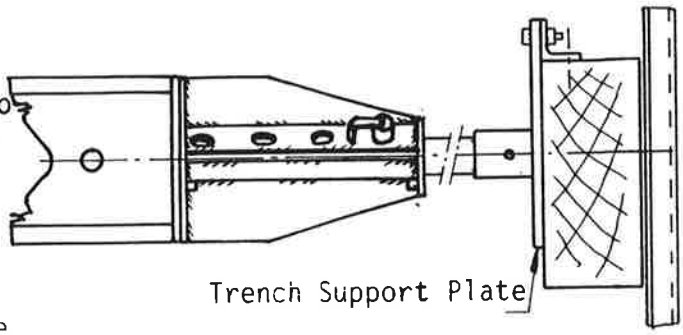

The Shoring Adaptor's jack may be secured to the Trench Support Plate with an M12 x 80 Bolt and Nut. Holes are provided in the Support Plate for nailing of the plate to the timber waling if required.

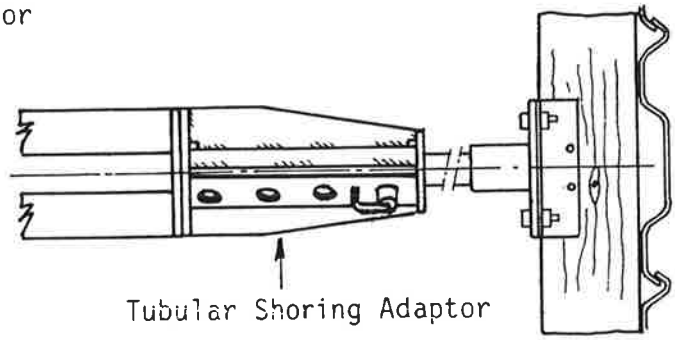

For dimension of:-

Shoring Adaptor see page 62
Trench Support Plate see page 64

Use of Soldier Bracing Coupler

Code No: 4430/35
Weight: 3.9 kg

The Soldier Bracing Coupler is used for fixing tubular lacing to soldiers. From the laces additional diagonal bracing may be coupled at an angle not less than 30° to the soldier.
The soldier bracing coupler is attached to the soldier by means of 2 clamps and the lacing tubes are then fixed with the half coupler.

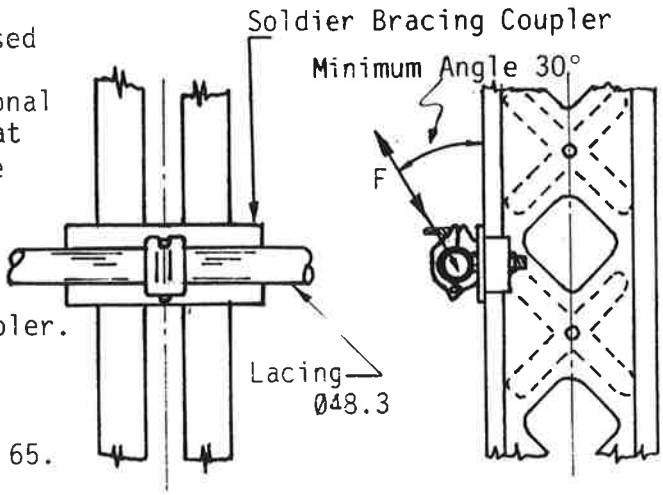

Max SWL (F) = 12.5 kN

For dimension of:-

Soldier Bracing Coupler see page 65.

Copyright in bezit van S.G.B. Group p.l.c. Mitcham, Surrey. Vermenigvuldiging of mededeling aan derden in welke vorm dan ook, is zonder schriftelijke toestemming van eigenares niet geoorloofd.

Copyright est la propriété de S.G.B. Group p.l.c. Mitcham, Surrey. La reproduction ou la communication à des tiers, sous quelque forme que ce soit n'est permise qu'avec l'autorisation écrite du propriétaire.

Copyright ist Eigentum der S.G.B. Group p.l.c. Mitcham, Surrey. Vervielfältigung oder Bekanntgabe an Dritte, in welcher Form auch, ohne schriftliche Genehmigung der Eigentümerin nicht gestattet.

Copyright owned by S.G.B. Group p.l.c. Mitcham, Surrey. Reproduction or disclosure to third parties in any form whatsoever is not allowed without the written consent of the proprietors. ©Copyright S.G.B. Group p.l.c. 19

SGB GROUP p.l.c.
WILLOW LANE MITCHAM
SURREY Tel. 01-648 3400

MK II STEEL SOLDIER SYSTEM
--SHORING SYSTEM -
USE OF ANICLLARY COMPONENTS

GROUP RESEARCH AND DEVELOPMENT DIVISION

Use of Forkhead (Continued)

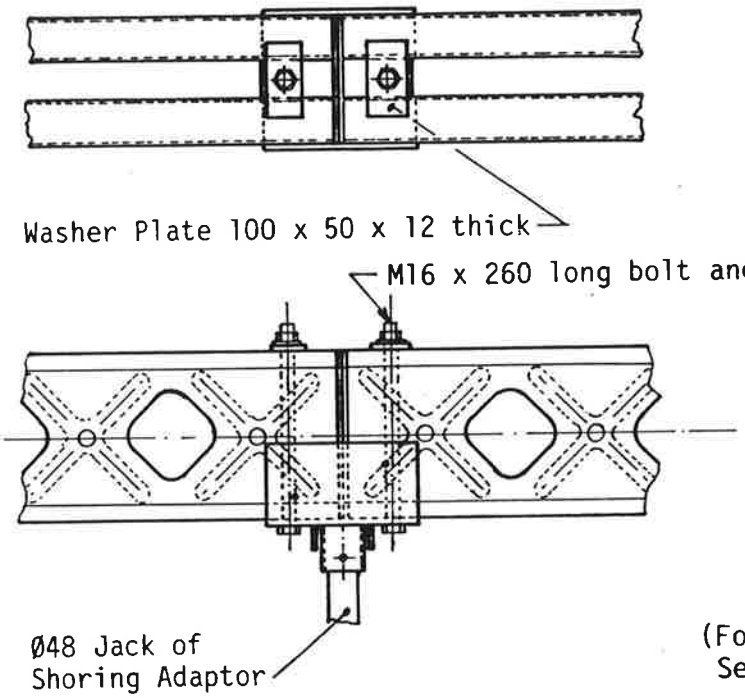

(For Forkhead Detail
See Page 62)

The new forkhead is wide enough to accept a Mk 2 Steel Soldier, and having a Ø60.3 socket can be fitted onto the Ø48 jack of the shoring adaptor.

Continuous soldiers can be supported or as shown two soldiers butted end to end and in each case the soldier may be secured to the forkhead using an M16 x 260 long bolt and nut together with a 100 x 50 x 12 thick washer plate. Alternatively a dividag rod minimum 360 long + 2 dividag nuts and washer plate may be used for securing.

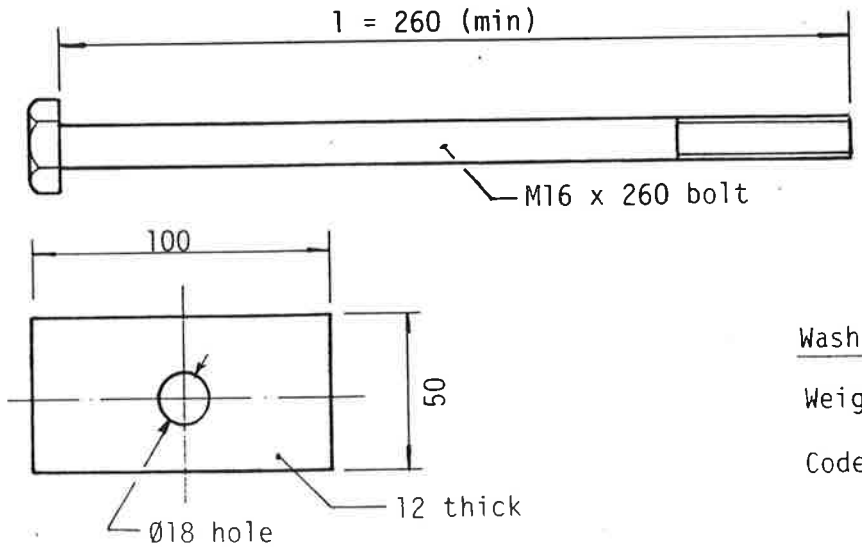

Washer Plate

Weight: 0.44 kg

Code No: 4430/61

Copyright owned by S.G.B. Group p.l.c. Mitcham, Surrey. Reproduction or disclosure to third parties in any form whatsoever is not allowed without the written consent of the proprietors. ©Copyright S.G.B Group p.l.c 19
Copyright ist Eigentum der S.G.B. Group p.l.c. Mitcham, Surrey. Vervielfältigung oder Bekanntgabe an Dritte, in welcher Form auch, ohne schriftliche Genehmigung der Eigentümerin nicht gestattet.
Copyright est la propriété de S.G.B. Group p.l.c. Mitcham, Surrey. La reproduction ou la communication à des tiers, sous quelque forme que ce soit n'est permise qu'avec l'autorisation écrite du propriétaire.
Copyright in bezit van S.G.B. Group p.l.c. Mitcham, Surrey. Vermenigvuldiging of mededeling aan derden in welke vorm dan ook, is zonder schriftelijke toestemming van eigenares niet geoorloofd.

SGB GROUP p.l.c.
WILLOW LANE MITCHAM
SURREY Tel. 01-648 3400

MK II STEEL SOLDIER SYSTEM
— SHORING SYSTEM —
HEIGHT MAKE UP SCHEDULE

Ref No. 129
Page No. 80
Date September 1984
GROUP RESEARCH AND DEVELOPMENT DIVISION

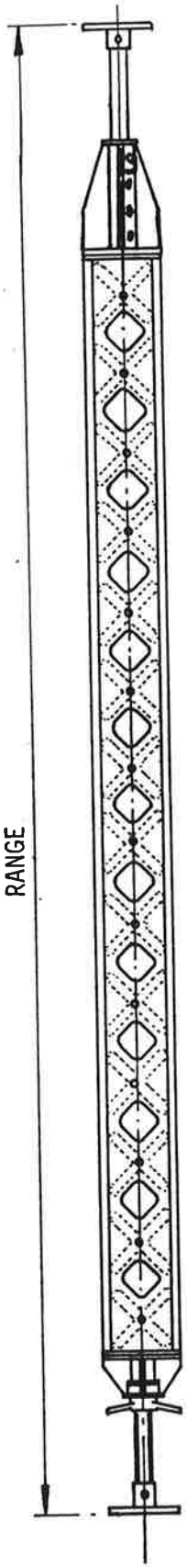

USING BASE PLATE AND HEADPLATE

RANGE		SOLDIERS							SHORING ADAPTOR					
MIN mm	MAX mm	0.450	0.900	1.125	1.800	2.700	3.150	3.600	Threaded	Tubular	Forkhead	Baseplate	M16 x 35 H.T. Set Screws & Nuts (Grade 8.8)	Weight kg.
1174	1594	1	-	-	-	-	-	-	1	1	-	2	8	40.84
1554	2044	-	1	-	-	-	-	-	1	1	-	2	8	50.62
1779	2269	-	-	1	-	-	-	-	1	1	-	2	8	54.62
2004	2494	1	1	-	-	-	-	-	1	1	-	2	12	62.73
2229	2719	1	-	1	-	-	-	-	1	1	-	2	12	66.73
2454	2944	-	-	-	1	-	-	-	1	1	-	2	8	66.61
2679	3169	-	1	1	-	-	-	-	1	1	-	2	12	76.51
2904	3394	1	-	-	1	-	-	-	1	1	-	2	12	78.72
3129	3619	1	1	1	-	-	-	-	1	1	-	2	16	88.64
3354	3844	-	-	-	-	1	-	-	1	1	-	2	8	83.39
3579	4069	-	-	1	1	-	-	-	1	1	-	2	12	92.50
3804	4294	-	-	-	-	-	1	-	1	1	-	2	8	91.77
4029	4519	-	-	3	-	-	-	-	1	1	-	2	16	106.42
4254	4744	-	-	-	-	-	-	1	1	1	-	2	8	100.16
4479	4969	-	-	1	-	1	-	-	1	1	-	2	12	109.28
4704	5194	1	-	-	-	-	-	1	1	1	-	2	12	112.27
4929	5419	-	-	1	-	-	1	-	1	1	-	2	12	117.66
5154	5644	-	1	-	-	-	-	1	1	1	-	2	12	122.05
5379	5869	-	-	1	-	-	-	1	1	1	-	2	12	126.05
5604	6094	-	-	-	1	-	1	-	1	1	-	2	12	129.65
5829	6319	-	1	1	-	-	1	-	1	1	-	2	16	139.57
6054	6544	-	-	-	1	-	-	1	1	1	-	2	12	138.04
6279	6769	-	1	1	-	-	-	1	1	1	-	2	16	147.96
6504	6994	-	-	-	-	1	1	-	1	1	-	2	12	146.43
6729	7219	-	-	1	1	-	1	-	1	1	-	2	16	155.56
6954	7444	-	-	-	-	1	-	1	1	1	-	2	12	154.82
7179	7669	-	-	1	1	-	-	1	1	1	-	2	16	163.95
7404	7894	-	-	-	-	-	1	1	1	1	-	2	12	163.20
7629	8119	-	-	1	-	1	1	-	1	1	-	2	16	172.34
7854	8344	-	-	-	-	-	-	2	1	1	-	2	12	171.59
8079	8469	-	-	1	-	1	-	1	1	1	-	2	16	180.73
8304	8794	-	-	-	1	1	1	-	1	1	-	2	16	184.33
8529	9019	-	-	1	-	-	1	1	1	1	-	2	16	189.11
8754	9244	-	-	-	1	1	-	1	1	1	-	2	16	192.72
8979	9469	-	-	1	-	-	-	2	1	1	-	2	16	197.50
9204	9694	-	-	-	-	2	1	-	1	1	-	2	16	201.11
9654	10144	-	-	-	1	-	-	2	1	1	-	2	16	209.49

For Dimensions of:-
Head/Base Plate see page 61
Shoring Adaptor's see page 61

Copyright in bezit van S.G.B. Group p.l.c. Mitcham, Surrey. Vermenigvuldiging of mededeling aan derden in welke vorm dan ook, is zonder schriftelijke toestemming van eigenares niet geoorloofd.
Copyright est la propriété de S.G.B. Group p.l.c. Mitcham, Surrey. La reproduction ou la communication à des tiers, sous quelque forme que ce soit n'est permise qu'avec l'autorisation écrite du propriétaire.
Copyright ist Eigentum der S.G.B. Group p.l.c. Mitcham, Surrey. Vervielfältigung oder Bekanntgabe an Dritte, in welcher Form auch, ohne schriftliche Genehmigung der Eigentümerin nicht gestattet.
Copyright owned by S.G.B. Group p.l.c. Mitcham, Surrey. Reproduction or disclosure to third parties in any form whatsoever is not allowed without the written consent of the proprietors. © Copyright S.G.B. Group p.l.c. 19

SGB GROUP p.l.c.
WILLOW LANE MITCHAM
SURREY Tel. 01-648 3400

MK II STEEL SOLDIER SYSTEM
— SHORING SYSTEM —
HEIGHT MAKE UP SCHEDULE

Ref No. J29
Page No. 81
Date September 1984

GROUP RESEARCH AND DEVELOPMENT DIVISION

USING BASE PLATE AND FORKHEAD

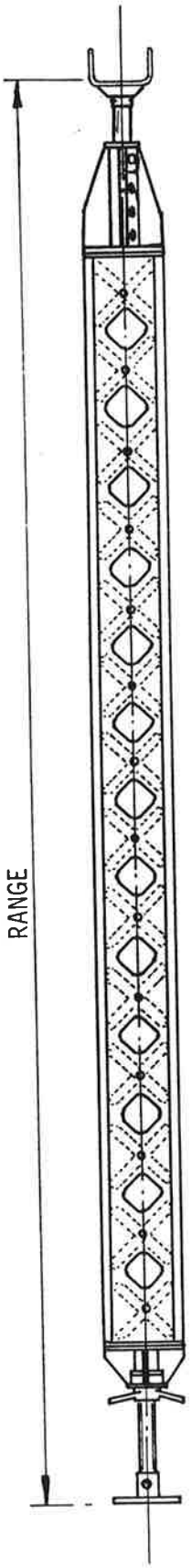

RANGE		SOLDIERS							SHORING ADAPTOR					
MIN mm	MAX mm	0.450	0.900	1.125	1.800	2.700	3.150	3.600	Threaded Bottom	Tubular Top	Forkhead	Baseplate	M16 x 35 H.T. Set Screws & Nuts (Grade 8.8)	Weight kg
1178	1598	1	-	-	-	-	-	-	1	1	1	1	8	42.34
1558	2048	-	1	-	-	-	-	-	1	1	1	1	8	52.12
1783	2273	-	-	1	-	-	-	-	1	1	1	1	8	56.12
2008	2498	1	1	-	-	-	-	-	1	1	1	1	12	64.23
2233	2723	1	-	1	-	-	-	-	1	1	1	1	12	68.23
2458	2948	-	-	-	1	-	-	-	1	1	1	1	8	68.11
2683	3173	-	1	1	-	-	-	-	1	1	1	1	12	78.01
2908	3398	1	-	-	1	-	-	-	1	1	1	1	12	80.22
3133	3623	1	1	1	-	-	-	-	1	1	1	1	16	90.14
3358	3848	-	-	-	-	1	-	-	1	1	1	1	8	84.89
3583	4073	-	-	1	1	-	-	-	1	1	1	1	12	94.00
3808	4298	-	-	-	-	-	1	-	1	1	1	1	8	93.27
4033	4523	-	-	3	-	-	-	-	1	1	1	1	16	107.92
4258	4748	-	-	-	-	-	-	1	1	1	1	1	8	101.66
4483	4973	-	-	1	-	1	-	-	1	1	1	1	12	110.78
4708	5198	1	-	-	-	-	-	1	1	1	1	1	12	113.77
4933	5423	-	-	1	-	-	1	-	1	1	1	1	12	119.16
5158	5648	-	1	-	-	-	-	1	1	1	1	1	12	123.55
5383	5873	-	-	1	-	-	-	1	1	1	1	1	12	127.55
5608	6098	-	-	-	1	-	1	-	1	1	1	1	12	131.15
5833	6323	-	1	1	-	-	1	-	1	1	1	1	16	141.09
6058	6548	-	-	-	1	-	-	1	1	1	1	1	12	139.54
6283	6773	-	1	1	-	-	-	1	1	1	1	1	16	149.46
6508	6998	-	-	-	-	1	1	-	1	1	1	1	12	146.93
6733	7223	-	-	1	1	-	1	-	1	1	1	1	16	157.06
6958	7448	-	-	-	-	1	-	1	1	1	1	1	12	156.32
7183	7673	-	-	1	1	-	-	1	1	1	1	1	16	165.45
7408	7898	-	-	-	-	-	1	1	1	1	1	1	12	164.70
7633	8123	-	-	1	-	1	1	-	1	1	1	1	16	173.84
7858	8348	-	-	-	-	-	-	2	1	1	1	1	12	173.09
8083	8573	-	-	1	-	1	-	1	1	1	1	1	16	182.23
8308	8798	-	-	-	1	1	1	-	1	1	1	1	16	185.83
8533	9023	-	-	1	-	-	1	1	1	1	1	1	16	190.61
8758	9248	-	-	-	1	1	-	1	1	1	1	1	16	194.22
8983	9473	-	-	1	-	-	-	2	1	1	1	1	16	199.00
9208	9698	-	-	-	-	2	1	-	1	1	1	1	16	202.61
9658	10148	-	-	-	1	-	-	2	1	1	1	1	16	210.99

For Dimension of:-
Forkhead see page 62
Shoring Adaptor's see page 61
Head/Base Plate see page 61

UDO 40573 ISSUED BY SGB GROUP RESEARCH AND DEVELOPMENT DIVISION - MITCHAM, ENGLAND.

Copyright in bezit van S.G.B. Group p.l.c. Mitcham, Surrey. Vermenigvuldiging of mededeling aan derden in welke vorm dan ook, is zonder schriftelijke toestemming van eigenares niet geoorloofd.
Copyright est la propriété de S.G.B. Group p.l.c. Mitcham, Surrey. La reproduction ou la communication à des tiers, sous quelque forme que ce soit n'est permise qu'avec l'autorisation écrite du propriétaire.
Copyright ist Eigentum der S.G.B. Group p.l.c. Mitcham, Surrey. Vervielfältigung oder Bekanntgabe an Dritte, in welcher Form auch, ohne schriftliche Genehmigung der Eigentümerin nicht gestattet.
Copyright owned by S.G.B. Group p.l.c. Mitcham, Surrey. Reproduction or disclosure to third parties in any form whatsoever is not allowed without the written consent of the proprietors. © Copyright S.G.B. Group p.l.c. 19

SGB GROUP p.l.c.
WILLOW LANE MITCHAM
SURREY Tel. 01-648 3400

MK II STEEL SOLDIER SYSTEM
— SHORING SYSTEM —
HEIGHT MAKE UP SCHEDULE

Ref No. J29
Page No. 82
Date September 1984
GROUP RESEARCH AND DEVELOPMENT DIVISION

USING BASE PLATE AT BOTTOM END ONLY

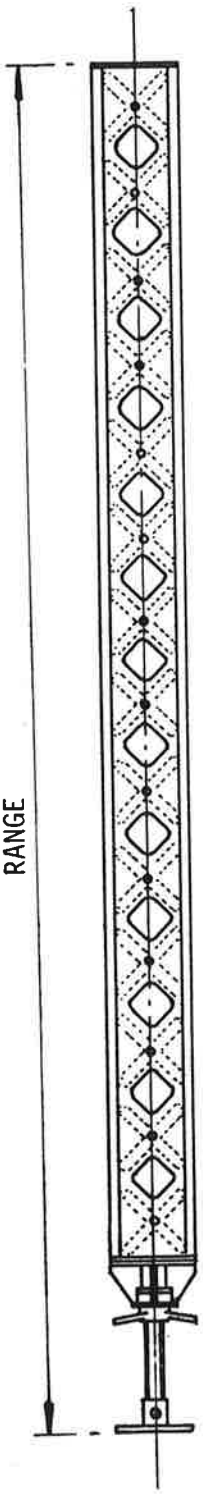

RANGE		SOLDIERS							SHORING ADAPTOR		Forkhead	Baseplate	M16 x 35 H.T. Set Screws & Nuts (Grade 8.8)	Weight kg
MIN mm	MAX mm	0.450	0.900	1.125	1.800	2.700	3.150	3.600	Threaded	Tubular				
687	937	1	-	-	-	-	-	-	1	-	-	1	4	24.01
1137	1387	-	1	-	-	-	-	-	1	-	-	1	4	33.79
1362	1612	-	-	1	-	-	-	-	1	-	-	1	4	37.79
1587	1837	1	1	-	-	-	-	-	1	-	-	1	8	45.90
1812	2062	1	-	1	-	-	-	-	1	-	-	1	8	49.90
2037	2287	-	-	-	1	-	-	-	1	-	-	1	4	49.78
2262	2512	-	1	1	-	-	-	-	1	-	-	1	8	59.68
2487	2737	1	-	-	1	-	-	-	1	-	-	1	8	61.89
2712	2962	1	1	1	-	-	-	-	1	-	-	1	12	71.81
2937	3187	-	-	-	-	1	-	-	1	-	-	1	4	66.56
3162	3412	-	-	1	1	-	-	-	1	-	-	1	8	75.67
3387	3637	-	-	-	-	-	1	-	1	-	-	1	4	74.94
3612	3862	-	-	3	-	-	-	-	1	-	-	1	12	89.59
3837	4087	-	-	-	-	-	-	1	1	-	-	1	4	83.33
4062	4312	-	-	1	-	1	-	-	1	-	-	1	8	92.47
4287	4537	1	-	-	-	-	-	1	1	-	-	1	8	95.46
4512	4762	-	-	1	-	-	1	-	1	-	-	1	8	100.85
4737	4987	-	1	-	-	-	-	1	1	-	-	1	8	105.24
4962	5212	-	-	1	-	-	-	1	1	-	-	1	8	109.24
5187	5437	-	-	-	1	-	1	-	1	-	-	1	8	112.84
5412	5662	-	1	1	-	-	1	-	1	-	-	1	12	122.74
5637	5887	-	-	-	1	-	-	1	1	-	-	1	8	121.23
5862	6112	-	1	1	-	-	-	1	1	-	-	1	12	131.13
6087	6337	-	-	-	-	1	1	-	1	-	-	1	8	129.62
6312	6562	-	-	1	1	-	1	-	1	-	-	1	12	138.73
6537	6787	-	-	-	-	1	-	1	1	-	-	1	8	138.01
6762	7012	-	-	1	1	-	-	1	1	-	-	1	8	147.12
6987	7237	-	-	-	-	-	1	1	1	-	-	1	8	146.39
7212	7462	-	-	1	-	1	1	-	1	-	-	1	12	155.51
7437	7687	-	-	-	-	-	-	2	1	-	-	1	8	154.78
7662	7912	-	-	1	-	1	-	1	1	-	-	1	12	163.91
7887	8137	-	-	-	1	1	1	-	1	-	-	1	12	167.51
8112	8362	-	-	1	-	-	1	1	1	-	-	1	12	172.29
8337	8587	-	-	-	1	1	-	1	1	-	-	1	12	175.90
8562	8812	-	-	1	-	-	-	2	1	-	-	1	12	180.68
8787	9037	-	-	-	-	2	1	-	1	-	-	1	12	184.29
9237	9487	-	-	-	1	-	-	2	1	-	-	1	12	192.67

For dimensions of: Shoring Adaptor see page 61
Head/Base Plate see page 61

Copyright owned by S.G.B. Group p.l.c. Mitcham, Surrey. Reproduction or disclosure to third parties in any form whatsoever is not allowed without the written consent of the proprietors. © Copyright S.G.B. Group p.l.c. 19
Copyright is bezit van S.G.B. Group p.l.c. Mitcham, Surrey. Vermenigvuldiging of mededeling aan derden in welke vorm dan ook, is zonder schriftelijke toestemming van eigenares niet geoorloofd.
Copyright est la propriété de S.G.B. Group p.l.c. Mitcham, Surrey. La reproduction ou la communication à des tiers, sous quelque forme que ce soit n'est permise qu'avec l'autorisation écrite du propriétaire.
Copyright ist Eigentum der S.G.B. Group p.l.c. Mitcham, Surrey. Vervielfältigung oder Bekanntgabe an Dritte, in welcher Form auch, ohne schriftliche Genehmigung der Eigentümerin nicht gestattet.

SGB GROUP p.l.c.
WILLOW LANE MITCHAM
SURREY Tel. 01-648 3400

MK II STEEL SOLDIER SYSTEM

— SHORING SYSTEM —

LENGTH MAKE UP SCHEDULE

Ref No. J29
Page No. 83
Date September 1984
GROUP RESEARCH AND DEVELOPMENT DIVISION

For schedule of possible ranges see page 84

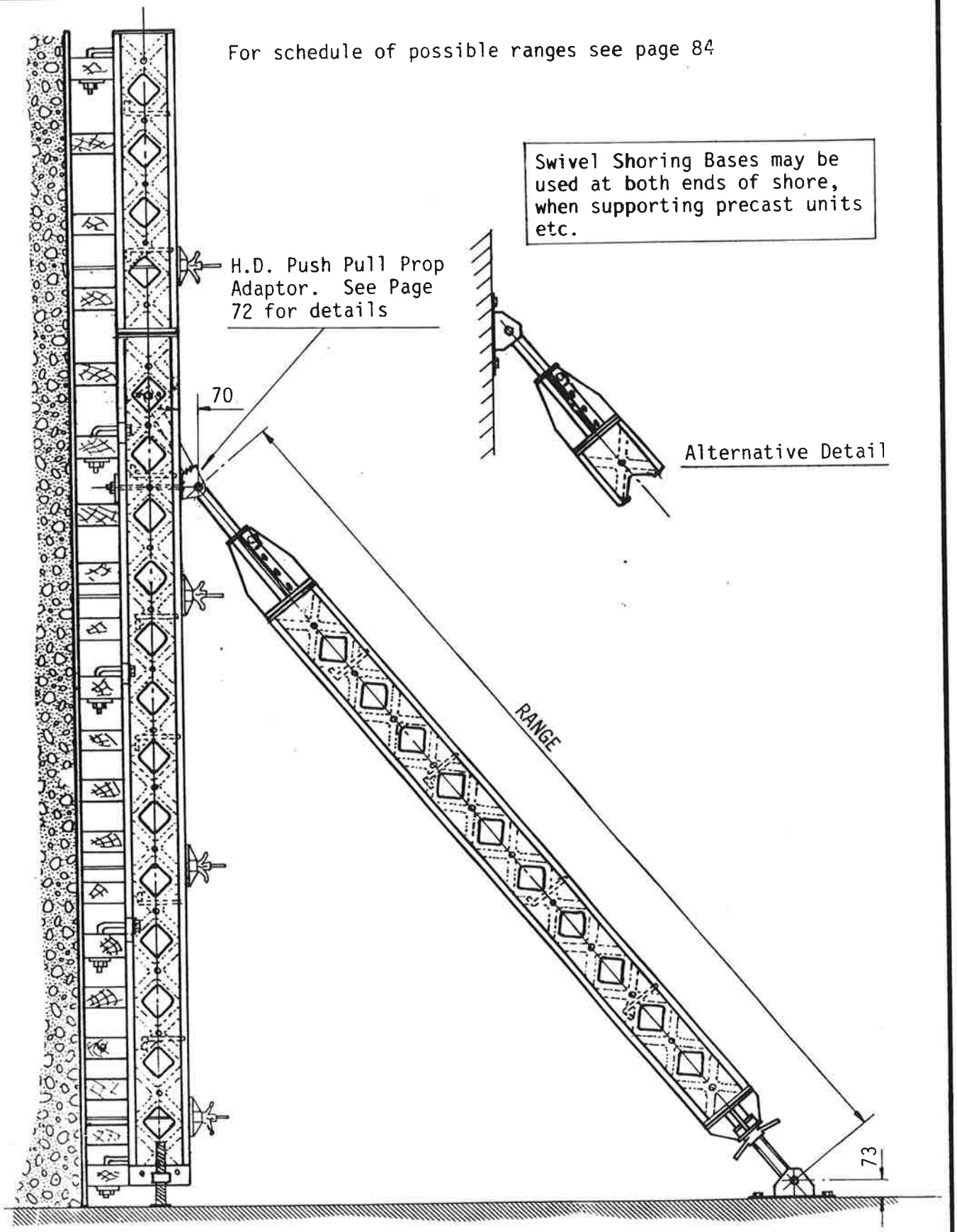

For dimensions of:
Shoring Adaptors see page 61
H.D. Push Pull Prop Adaptor see page 63
Swivel Shoring Base see page 62

Copyright in bezit van S.G.B. Group p.l.c. Mitcham, Surrey. Vermenigvuldiging of mededeling aan derden in welke vorm dan ook, is zonder schriftelijke toestemming van eigenares niet geoorloofd.
Copyright est la propriété de S.G.B. Group p.l.c. Mitcham, Surrey. La reproduction ou la communication à des tiers, sous quelque forme que ce soit n'est permise qu'avec l'autorisation écrite du propriétaire.
Copyright ist Eigentum der S.G.B. Group p.l.c. Mitcham, Surrey. Vervielfältigung oder Bekanntgabe an Dritte, in welcher Form auch, ohne schriftliche Genehmigung der Eigentümerin nicht gestattet.
Copyright owned by S.G.B. Group p.l.c. Mitcham, Surrey. Reproduction or disclosure to third parties in any form whatsoever is not allowed without the written consent of the proprietor. ©Copyright S.G.B. Group p.l.c. 1984

SGB GROUP p.l.c.
WILLOW LANE MITCHAM
SURREY Tel. 01-648 3400

MK II STEEL SOLDIER SYSTEM
— SHORING SYSTEM —

LENGTH MAKE UP SCHEDULE

Ref No. J29
Page No. 84
Date January 1985

GROUP RESEARCH AND DEVELOPMENT DIVISION

USING SOLDIERS AS RAKING SHORE

RANGE		SOLDIERS							SHORING ADAPTOR					
MIN mm	MAX mm	0.450	0.900	1.125	1.800	2.700	3.150	3.600	Threaded	Tubular	Swivel Shoring Base	H.D. Push Pull Prop Adaptor	M16 x 35 H.T.Set Screws & Nuts (Grade 8.8)	Weight Kg excluding adaptor and Base
1078	1498	1	-	-	-	-	-	-	1	1	1	1	8	33.68
1468	1948	-	1	-	-	-	-	-	1	1	1	1	8	43.82
1693	2173	-	-	1	-	-	-	-	1	1	1	1	8	47.82
1918	2398	1	1	-	-	-	-	-	1	1	1	1	12	55.93
2143	2623	1	-	1	-	-	-	-	1	1	1	1	12	59.93
2368	2848	-	-	-	1	-	-	-	1	1	1	1	8	59.81
2593	3073	-	1	1	-	-	-	-	1	1	1	1	12	69.71
2818	3298	1	-	-	1	-	-	-	1	1	1	1	12	71.92
3043	3523	1	1	1	-	-	-	-	1	1	1	1	16	81.84
3268	3748	-	-	-	-	1	-	-	1	1	1	1	8	76.59
3493	3973	-	-	1	1	-	-	-	1	1	1	1	12	85.70
3718	4198	-	-	-	-	-	1	-	1	1	1	1	8	84.94
3943	4423	-	-	3	-	-	-	-	1	1	1	1	16	99.62
4168	4648	-	-	-	-	-	-	1	1	1	1	1	8	93.36
4393	4873	-	-	1	-	1	-	-	1	1	1	1	12	102.48
4618	5098	1	-	-	-	-	-	1	1	1	1	1	12	105.47
4843	5323	-	-	1	-	-	1	-	1	1	1	1	12	110.86
5068	5548	-	1	-	-	-	-	1	1	1	1	1	12	115.25
5293	5773	-	-	1	-	-	-	1	1	1	1	1	12	119.25
5518	5998	-	-	-	1	-	1	-	1	1	1	1	12	122.85
5743	6223	-	1	1	-	-	1	-	1	1	1	1	16	132.77
5968	6448	-	-	-	1	-	-	1	1	1	1	1	12	131.24
6193	6673	-	1	1	-	-	-	1	1	1	1	1	16	141.16
6418	6898	-	-	-	-	1	1	-	1	1	1	1	12	139.63
6643	7123	-	-	1	1	-	1	-	1	1	1	1	16	148.76
6868	7348	-	-	-	-	1	-	1	1	1	1	1	12	148.02
7093	7573	-	-	1	1	-	-	1	1	1	1	1	16	157.15
7318	7798	-	-	-	-	-	1	1	1	1	1	1	12	156.40
7543	8023	-	-	1	-	1	1	-	1	1	1	1	16	165.54
7768	8248	-	-	-	-	-	-	2	1	1	1	1	12	164.79
7993	8373	-	-	1	-	1	-	1	1	1	1	1	16	173.93
8218	8698	-	-	-	1	1	1	-	1	1	1	1	16	177.53
8443	8923	-	-	1	-	-	1	1	1	1	1	1	16	182.31
8668	9148	-	-	-	1	1	-	1	1	1	1	1	16	185.92
8893	9373	-	-	1	-	-	-	2	1	1	1	1	16	190.70
9118	9598	-	-	-	-	2	1	-	1	1	1	1	16	194.31
9568	10048	-	-	-	1	-	-	2	1	1	1	1	16	202.69

Range measured from Ø 25 holes in Shoring Adaptors tube or jack (for illustration see page 83)

For dimensions of:-

Shoring Adaptors see page 61
Swivel Shoring Base see page 62
H.D. Push Pull Prop Adaptor see page 63

Copyright owned by S.G.B. Group p.l.c. Mitcham, Surrey. Reproduction or disclosure to third parties in any form whatsoever is not allowed without the written consent of the proprietor. ©Copyright S.G.B. Group p.l.c. 19

Copyright est la propriété de S.G.B. Group p.l.c. Mitcham, Surrey. La reproduction ou la communication à des tiers, sous quelque forme que ce soit n'est permise qu'avec l'autorisation écrite du propriétaire.

Copyright ist Eigentum der S.G.B. Group p.l.c. Mitcham, Surrey. Vervielfältigung oder Bekanntgabe an Dritte, in welcher Form auch, ohne schriftliche Genehmigung der Eigentümerin nicht gestattet.

Copyright in bezit van S.G.B. Group p.l.c. Mitcham, Surrey. Vermenigvuldiging of mededeling aan derden in welke vorm dan ook, is zonder schriftelijke toestemming van eigenares niet geoorloofd.

SGB GROUP p.l.c.
WILLOW LANE MITCHAM
SURREY Tel. 01-648 3400

MK II STEEL SOLDIER SYSTEM
— SHORING SYSTEM —
LENGTH MAKE UP SCHEDULE

Ref No. J29
Page No. 35
Date September 1984

GROUP RESEARCH AND DEVELOPMENT DIVISION

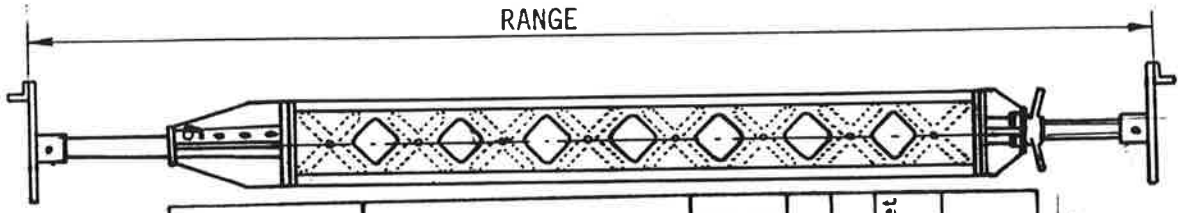

FOR TRENCH STRUTS

RANGE		SOLDIERS							SHORING ADAPTOR					
MIN mm	MAX mm	0.450	0.900	1.125	1.800	2.700	3.150	3.600	Threaded	Tubular	Forkhead	Trench Support Plate	M16 x 35 H.T. Set Screws & Nuts (Grade 8.8)	Weight kg.
1174	1594	1	-	-	-	-	-	-	1	1	-	2	8	47.24
1554	2044	-	1	-	-	-	-	-	1	1	-	2	8	57.02
1779	2269	-	-	1	-	-	-	-	1	1	-	2	8	61.02
2004	2494	1	1	-	-	-	-	-	1	1	-	2	12	69.13
2229	2719	1	-	1	-	-	-	-	1	1	-	2	12	73.13
2454	2944	-	-	-	1	-	-	-	1	1	-	2	8	73.01
2679	3169	-	1	1	-	-	-	-	1	1	-	2	12	82.91
2904	3394	1	-	-	1	-	-	-	1	1	-	2	12	85.12
3129	3619	1	1	1	-	-	-	-	1	1	-	2	16	95.04
3354	3844	-	-	-	-	1	-	-	1	1	-	2	8	89.79
3579	4069	-	-	1	1	-	-	-	1	1	-	2	12	98.90
3804	4294	-	-	-	-	-	1	-	1	1	-	2	8	98.17
4029	4519	-	-	3	-	-	-	-	1	1	-	2	16	112.82
4254	4744	-	-	-	-	-	-	1	1	1	-	2	8	106.56
4479	4969	-	-	1	-	1	-	-	1	1	-	2	12	115.60
4704	5194	1	-	-	-	-	-	1	1	1	-	2	12	118.67
4929	5419	-	-	1	-	-	1	-	1	1	-	2	12	124.06
5154	5644	-	1	-	-	-	-	1	1	1	-	2	12	128.45
5379	5869	-	-	1	-	-	-	1	1	1	-	2	12	132.45
5604	6094	-	-	-	1	-	1	-	1	1	-	2	12	136.05
5829	6319	-	1	1	-	-	1	-	1	1	-	2	16	145.97
6054	6544	-	-	-	1	-	-	1	1	1	-	2	12	144.44
6279	6769	-	1	1	-	-	-	1	1	1	-	2	16	154.36
6504	6994	-	-	-	-	1	1	-	1	1	-	2	12	152.83
6729	7219	-	-	1	1	-	1	-	1	1	-	2	16	161.96
6954	7444	-	-	-	-	1	-	1	1	1	-	2	12	161.22
7179	7669	-	-	1	1	-	-	1	1	1	-	2	16	170.35
7404	7894	-	-	-	-	-	1	1	1	1	-	2	12	169.60
7629	8119	-	-	1	-	1	1	-	1	1	-	2	16	178.74
7854	8344	-	-	-	-	-	-	2	1	1	-	2	12	177.99
8079	8469	-	-	1	-	1	-	1	1	1	-	2	16	187.13
8304	8794	-	-	-	1	1	1	-	1	1	-	2	16	190.73
8529	9019	-	-	1	-	-	1	1	1	1	-	2	16	195.51
8754	9244	-	-	-	1	1	-	1	1	1	-	2	16	199.12
8979	9469	-	-	1	-	-	-	2	1	1	-	2	16	203.51
9204	9694	-	-	-	-	2	1	-	1	1	-	2	16	207.51
9654	10144	-	-	-	1	-	-	2	1	1	-	2	16	216.89

For dimensions of: Shoring Adaptors see Page 61
Trench Support Plate see Page 64

Copyright owned by S.G.B. Group p.l.c. Mitcham, Surrey. Reproduction or disclosure to third parties in any form whatsoever is not allowed without the written consent of the proprietors. © Copyright S.G.B. Group p.l.c. 19

Copyright est la propriété de S.G.B. Group p.l.c. Mitcham, Surrey. La reproduction ou la communication à des tiers, sous quelque forme que ce soit n'est permise qu'avec l'autorisation écrite du propriétaire.

Copyright ist Eigentum der S.G.B. Group p.l.c. Mitcham, Surrey. Vervielfältigung oder Bekanntgabe an Dritte, in welcher Form auch, ohne schriftliche Genehmigung der Eigentümerin nicht gestattet.

Copyright in bezit van S.G.B. Group p.l.c. Mitcham, Surrey. Vermenigvuldiging of mededeling aan derden in welke vorm dan ook, is zonder schriftelijke toestemming van eigenares niet geoorloofd.

SGB GROUP p.l.c.
WILLOW LANE MITCHAM
SURREY Tel. 01-648 3400

MK II STEEL SOLDIER SYSTEM
— SHORING SYSTEM —
INTRODUCTION TO LOADING DATA

GROUP RESEARCH AND DEVELOPMENT DIVISION

Minor Axis Direction B
Major Axis Direction A

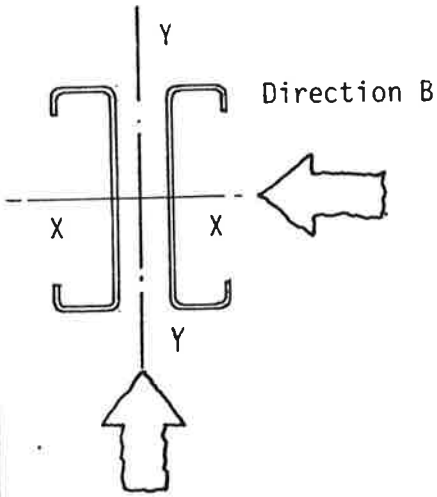

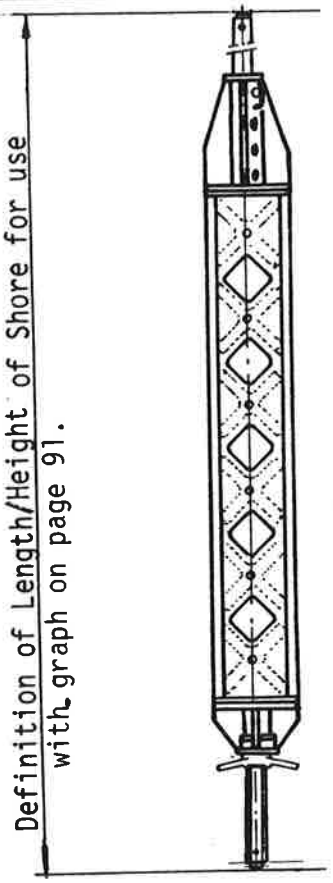

The allowable load on a single shore is limited by its unrestrained length. Depending on its application i.e. vertical, horizontal or inclined the allowable axial load can be read from the graphs on page 91.

However, the maximum load = 100 kN and the maximum overall length = 10.0m.

If for a specific length a higher load is required than allowed the shore will need to be laced and braced in the direction of the minor axis (Direction B).

When adequately laced/braced in this direction the shore is capable of carrying the full 100 kN load for a maximum length of 10.0m.

The diagrams on page 92 and onwards show various methods lacing and bracing, using the soldier bracing coupler together with tube and fittings. If bracing is required the distance between restrained nodes is not to exceed 4.5m.

Although lacing/bracing of shores in the direction of the major axis is not normally required up to lengths of 9.0m., it may be desirable to lace and brace in this direction, for stability reasons.

Care should also be taken when building towers consisting of 4 shores with a large height to base ratio. Slender towers should be laced to other temporary or existing structures for stability.

If a group of shores is braced together to form a tower or a support grid horizontal forces may need to be resisted, in which case the allowable horizontal loads on unbraced jacks can be read from the graph on page 92. If higher horizontal need to be resisted, then jackbracing is required.

Details of how to brace jacks are shown on page 92 and onwards.

Any bracing should be capable of transmitting the applied forces and any design should be in accordance with B.S. 5975: 1982.

Copyright in bezit van S.G.B. Group p.l.c. Mitcham, Surrey. Vermenigvuldiging of mededeling aan derden in welke vorm dan ook, is zonder schriftelijke toestemming van eigenares niet geoorloofd.

Copyright est la propriété de S.G.B. Group p.l.c. Mitcham, Surrey. La reproduction ou la communication à des tiers, sous quelque forme que ce soit n'est permise qu'avec l'autorisation écrite du propriétaire.

Copyright ist Eigentum der S.G.B. Group p.l.c. Mitcham, Surrey. Vervielfältigung oder Bekanntgabe an Dritte, in welcher Form auch, ohne schriftliche Genehmigung der Eigentümerin nicht gestattet.

Copyright owned by S.G.B. Group p.l.c. Mitcham, Surrey. Reproduction or disclosure to third parties in any form whatsoever is not allowed without the written consent of the proprietor. © Copyright S.G.B. Group p.l.c. 19

SGB GROUP p.l.c.
WILLOW LANE MITCHAM
SURREY Tel. 01-648 3400

MK II STEEL SOLDIER SYSTEM
— SHORING SYSTEM —
LOADING DATA

Ref No. J29
Page No. 91
Date April 1984
GROUP RESEARCH AND DEVELOPMENT DIVISION

The graph below shows the relationship between the allowable loads and the height/length of unbraced shores.
Note that when using the shores in conjunction with the Heavy Duty Push Pull Prop Adaptor and the Web Bearing Plates the max. load in the shore is 90 kN (limited by the Web Bearing Plate).
The height/length of the shore is defined as shown on page 90.

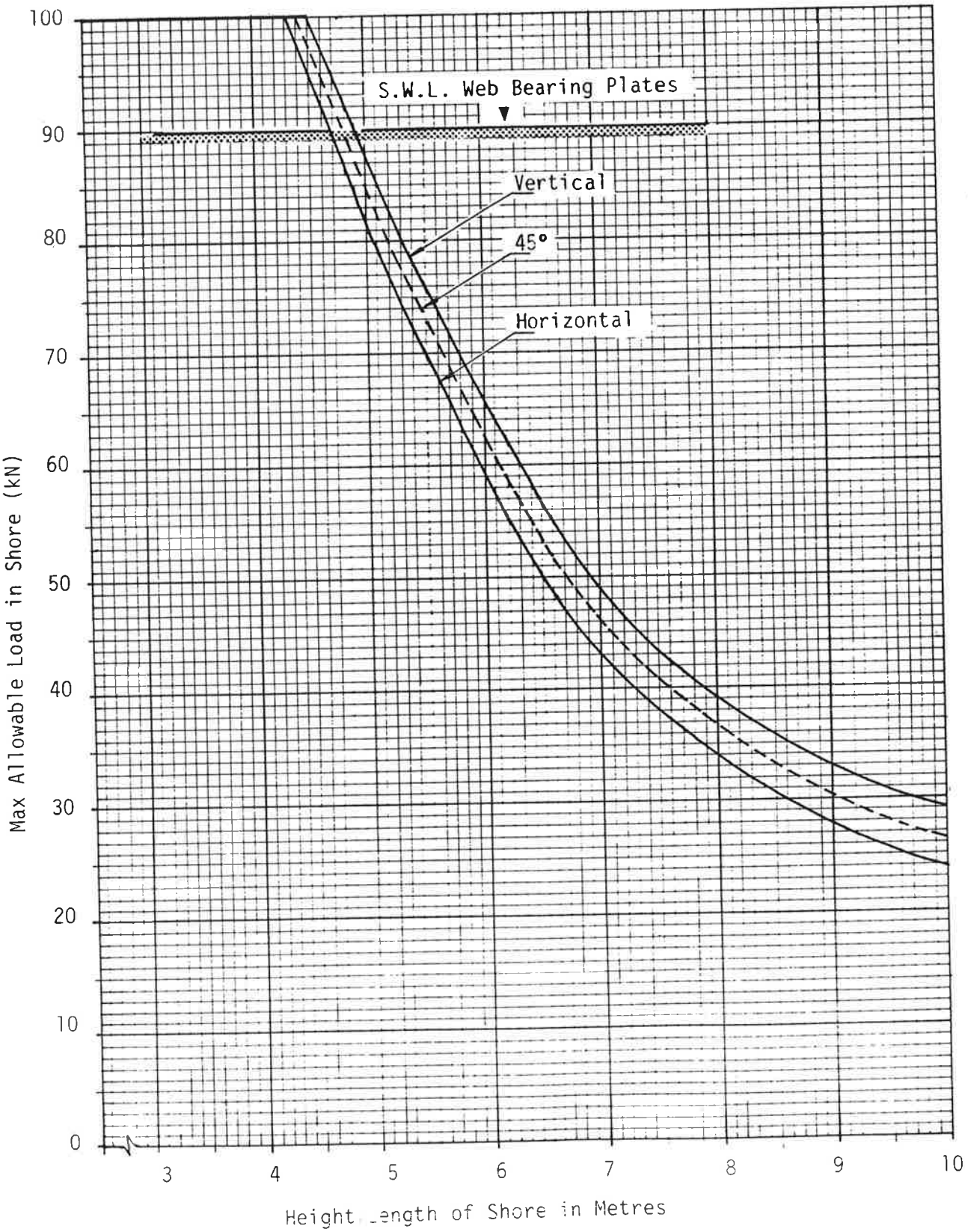

Copyright in bezit van S.G.B. Group p.l.c. Mitcham, Surrey. Vermenigvuldiging of mededeling aan derden in welke vorm dan ook, is zonder schriftelijke toestemming van eigenares niet geoorloofd.
Copyright est la propriété de S.G.B. Group p.l.c. Mitcham, Surrey. La reproduction ou la communication à des tiers, sous quelque forme que ce soit n'est permise qu'avec l'autorisation écrite du propriétaire.
Copyright ist Eigentum der S.G.B. Group p.l.c. Mitcham, Surrey. Vervielfältigung oder Bekanntgabe an Dritte, in welcher Form auch, ohne schriftliche Genehmigung der Eigentümerin nicht gestattet.
Copyright owned by S.G.B. Group p.l.c. Mitcham, Surrey. Reproduction or disclosure to third parties in any form whatsoever is not allowed without the written consent of the proprietors. ©Copyright S.G.B. Group p.l.c. 19

SGB GROUP p.l.c.
WILLOW LANE MITCHAM
SURREY Tel. 01-648 3400

MK II STEEL SOLDIER SYSTEM
— SHORING SYSTEM —
JACK BRACING GRAPH

Ref No. J29
Page No. 92
Date September 1984

GROUP RESEARCH AND DEVELOPMENT DIVISION

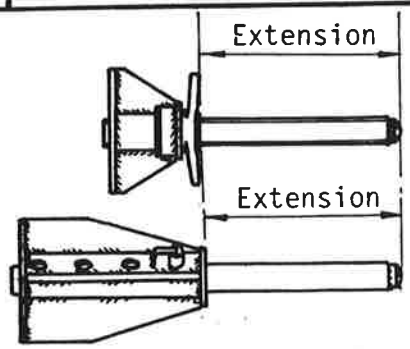

The allowable horizontal force for unbraced jacks depends on the amount of extension, as shown in the graph below. Should a higher horizontal force be required the jacks will need bracing as shown on pages 95 and 96.

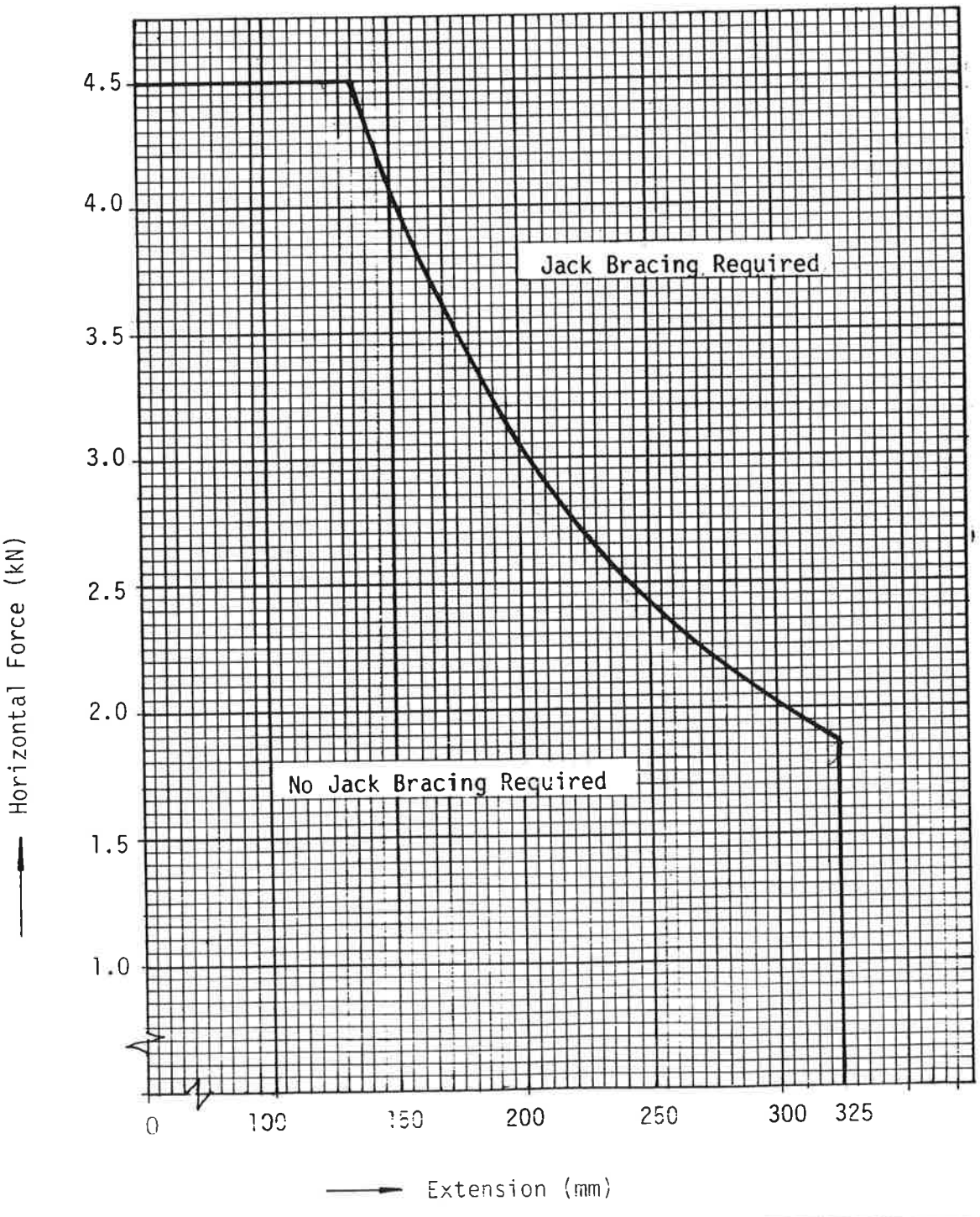

Copyright owned by S.G.B. Group p.l.c. Mitcham, Surrey. Reproduction or disclosure to third parties in any form whatsoever is not allowed without the written consent of the proprietors. ©Copyright S.G.B. Group p.l.c. 19

Copyright ist Eigentum der S.G.B. Group p.l.c. Mitcham, Surrey. Vervielfältigung oder Bekanntgabe an Dritte, in welcher Form auch, ohne schriftliche Genehmigung der Eigentümerin nicht gestattet.

Copyright est la propriété de S.G.B. Group p.l.c. Mitcham, Surrey. La reproduction ou la communication à des tiers, sous quelque forme que ce soit n'est permise qu'avec l'autorisation écrite du propriétaire.

Copyright in bezit van S.G.B. Group p.l.c. Mitcham, Surrey. Vermenigvuldiging of mededeling aan derden in welke vorm dan ook, is zonder schriftelijke toestemming van eigenares niet geoorloofd.

SGB GROUP p.l.c.
WILLOW LANE MITCHAM
SURREY Tel. 01-648 3400

MK II STEEL SOLDIER SYSTEM

— SHORING SYSTEM —

METHOD OF LACING AND BRACING

GROUP RESEARCH AND DEVELOPMENT DIVISION

Mk II Soldier Bracing Coupler

Code No: 4430/35
Weight: 3.9 kg.

The Soldier Bracing Coupler is attached to the Soldier using the two U Clamps (shown right). Lacing tube may then be secured to the Soldier using the ½ Coupler provided.
Once laced in this manner, lacing tubes may then be fixed using right angled couplers at 90°.

For further details see pages 65 & 73

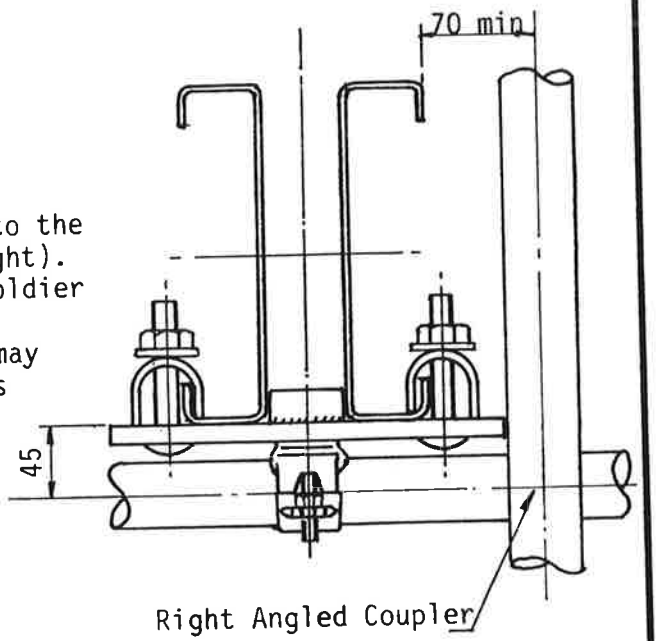

Copyright owned by S.G.B. Group p.l.c. Mitcham, Surrey. Reproduction or disclosure to third parties in any form whatsoever is not allowed without the written consent of the proprietors ©Copyright S.G.B. Group p.l.c. 19
Copyright ist Eigentum der S.u.d. Group p.l.c. Mitcham, Surrey. Vervielfältigung oder Bekanntgabe an Dritte, in welcher Form auch, ohne schriftliche Genehmigung der Eigentümerin nicht gestattet.
Copyright est la propriété de S.G.B. Group p.l.c. Mitcham, Surrey. La reproduction ou la communication à des tiers, sous quelque forme que ce soit n'est permise qu'avec l'autorisation écrite du propriétaire.
Copyright in bezit van S.G.B. Group p.l.c. Mitcham, Surrey. Vermenigvuldiging of mededeling aan derden in welke vorm dan ook, is zonder schriftelijke toestemming van eigenares niet geoorloofd.

SGB GROUP p.l.c.
WILLOW LANE MITCHAM
SURREY Tel. 01-648 3400

MK II STEEL SOLDIER SYSTEM
— SHORING SYSTEM —
METHOD OF LACING AND BRACING

Ref No. 4xJ29
Page No. 94
Date October 1984
GROUP RESEARCH AND DEVELOPMENT DIVISION

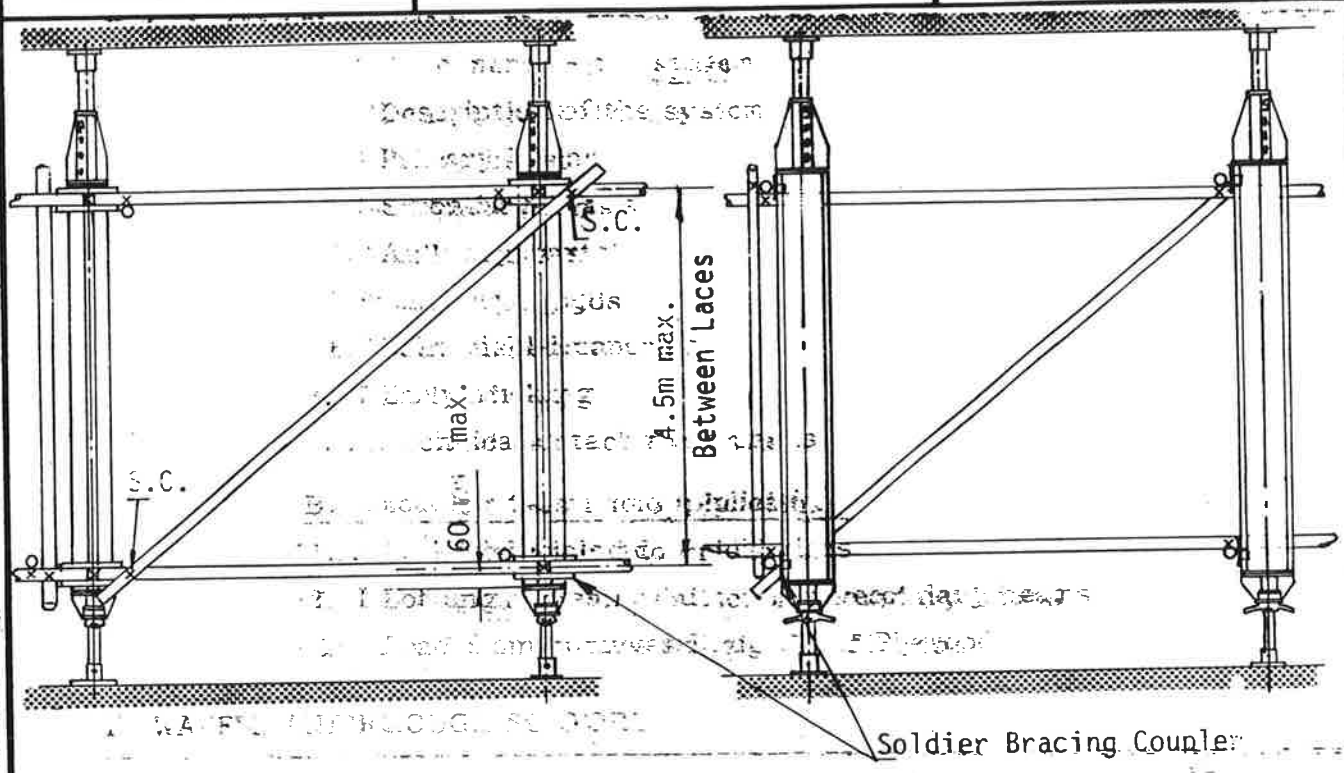

The Elevations above show the use of the Soldier Bracing Coupler, with the braces in one direction fixed with Swivel Couplers.

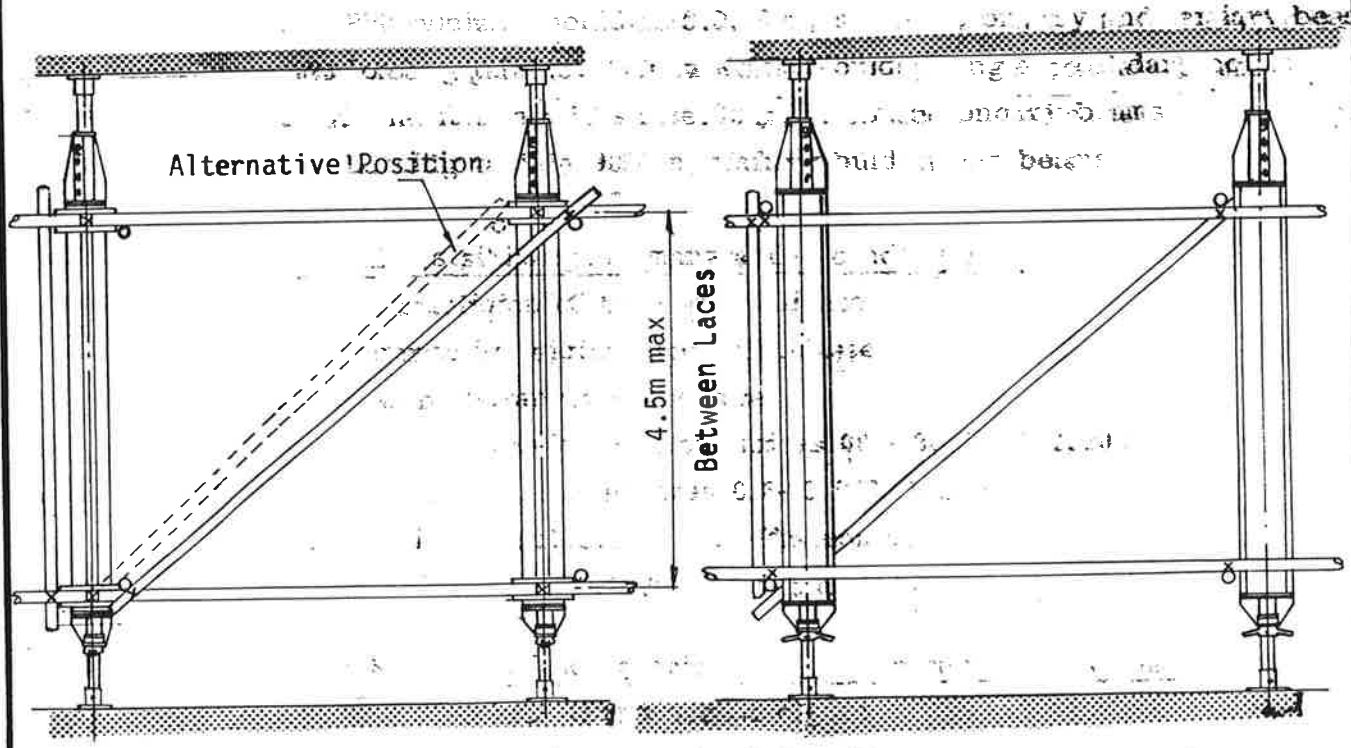

Elevation showing the use of Soldier Bracing Coupler and Right Angled Couplers only.

S.C. = Swivel Coupler

Copyright owned by S.G.B. Group p.l.c. Mitcham, Surrey. Reproduction or disclosure to third parties in any form whatsoever is not allowed without the written consent of the proprietors. © Copyright S.G.B. Group p.l.c. 1984

Copyright in bezit van S.G.B. Group p.l.c. Mitcham, Surrey. Vermenigvuldiging of mededeling aan derden in welke vorm dan ook, is zonder schriftelijke toestemming van eigenares niet geoorloofd.

Copyright, est la propriété de S.G.B. Group p.l.c. Mitcham, Surrey. Toute reproduction ou la communication à des tiers, sous quelque forme que ce soit n'est permise qu'avec l'autorisation écrite du propriétaire.

Copyright ist im Eigentum der S.G.B. Group p.l.c. Mitcham, Surrey. Vervielfältigung oder Bekanntgabe an Dritte, in welcher Form auch, ohne schriftliche Genehmigung der Eigentümerin nicht gestattet.

SGB GROUP p.l.c.
WILLOW LANE MITCHAM
SURREY Tel. 01-648 3400

MK II STEEL SOLDIER SYSTEM
— SHORING SYSTEM —
METHODS OF JACK BRACING

Ref. No. J29
Page No. 95
Date October 1984
GROUP RESEARCH AND DEVELOPMENT DIVISION

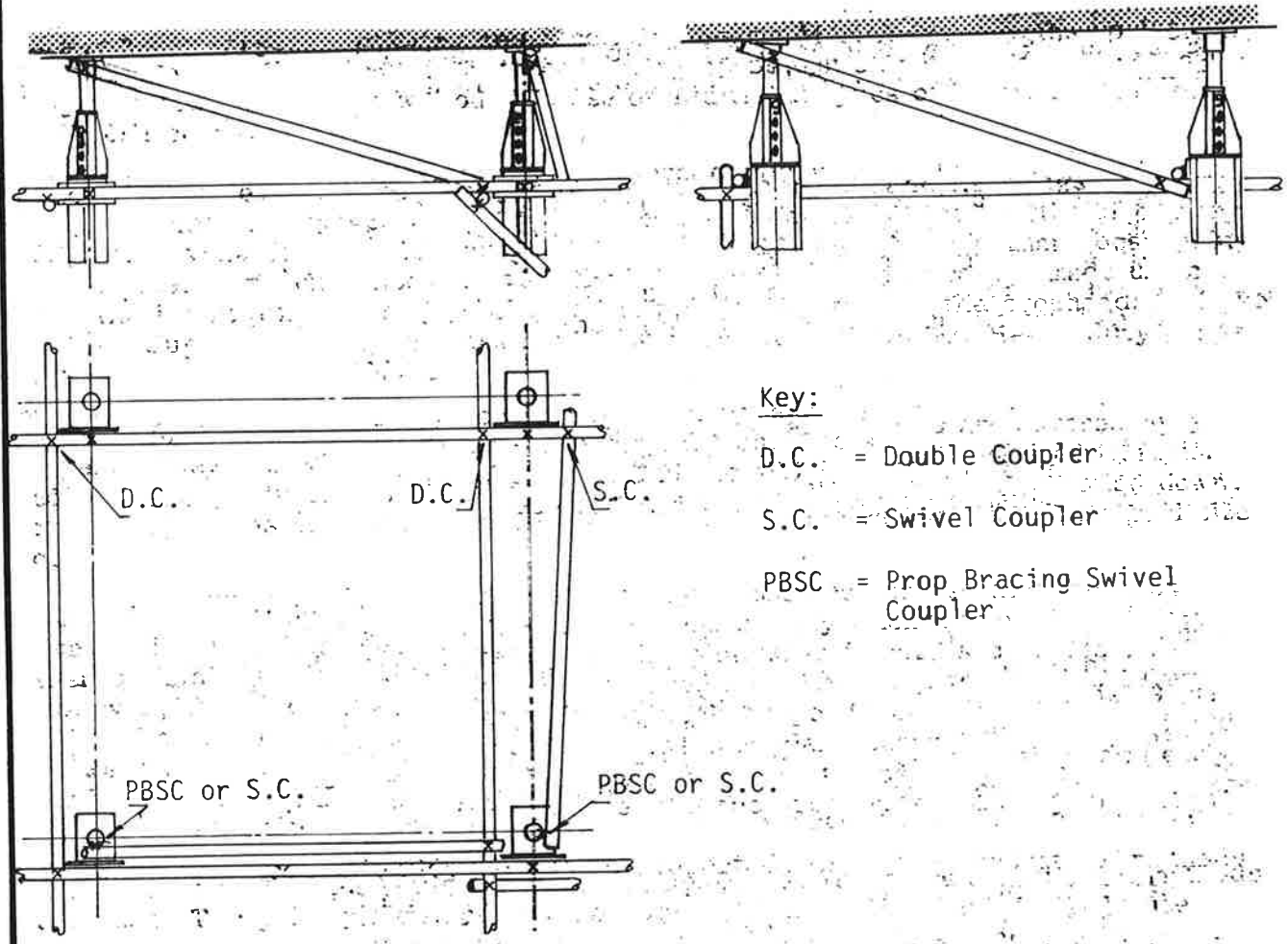

Key:

D.C. = Double Coupler

S.C. = Swivel Coupler

PBSC = Prop Bracing Swivel Coupler

Jacks can be braced in various ways, using swivel couplers which fit on to the threaded jack, or using a Prop Bracing Swivel Coupler which fits onto the socket of the Head/Base plate (shown above). An alternative arrangement is to use a lacing mat at Head/Base Plate level and use Double Couplers (shown on page 96).

Using Swivel Couplers there is no need for an extra lacing mat at Head/Base Plate level. In this case it is assumed that the soffit deck is rigid enough to share the horizontal forces equally amongst all the jacks.

Copyright owned by S.G.B. Group p.l.c. Mitcham, Surrey. Reproduction or disclosure to third parties in any form whatsoever is not allowed without the written consent of the proprietors. ©Copyright S.G.B. Group p.l.c. 19
Copyright est la propriété de S.G.B. Group p.l.c. Mitcham, Surrey. La reproduction ou la communication à des tiers, sous quelque forme que ce soit n'est permise qu'avec l'autorisation écrite du propriétaire.
Copyright ist Eigentum der S.G.B. Group p.l.c. Mitcham, Surrey. Vervielfältigung oder Bekanntgabe an Dritte, in welcher Form auch, ohne schriftliche Genehmigung der Eigentümerin nicht gestattet.
Copyright in bezit van S.G.B. Group p.l.c. Mitcham, Surrey. Vermenigvuldiging of mededeling aan derden in welke vorm dan ook, is zonder schriftelijke toestemming van eigenares niet geoorloofd.

SGB GROUP p.l.c.
WILLOW LANE MITCHAM
SURREY Tel. 01-648 3400

MK 11 STEEL SOLDIER SYSTEM
— SHORING SYSTEM —
METHODS OF JACK BRACING

Ref No. J29
Page No. 96
Date October 1984
GROUP RESEARCH AND DEVELOPMENT DIVISION

Lacing mat at just below Head/Base Plate level is fixed to the plain tube with Double Couplers.

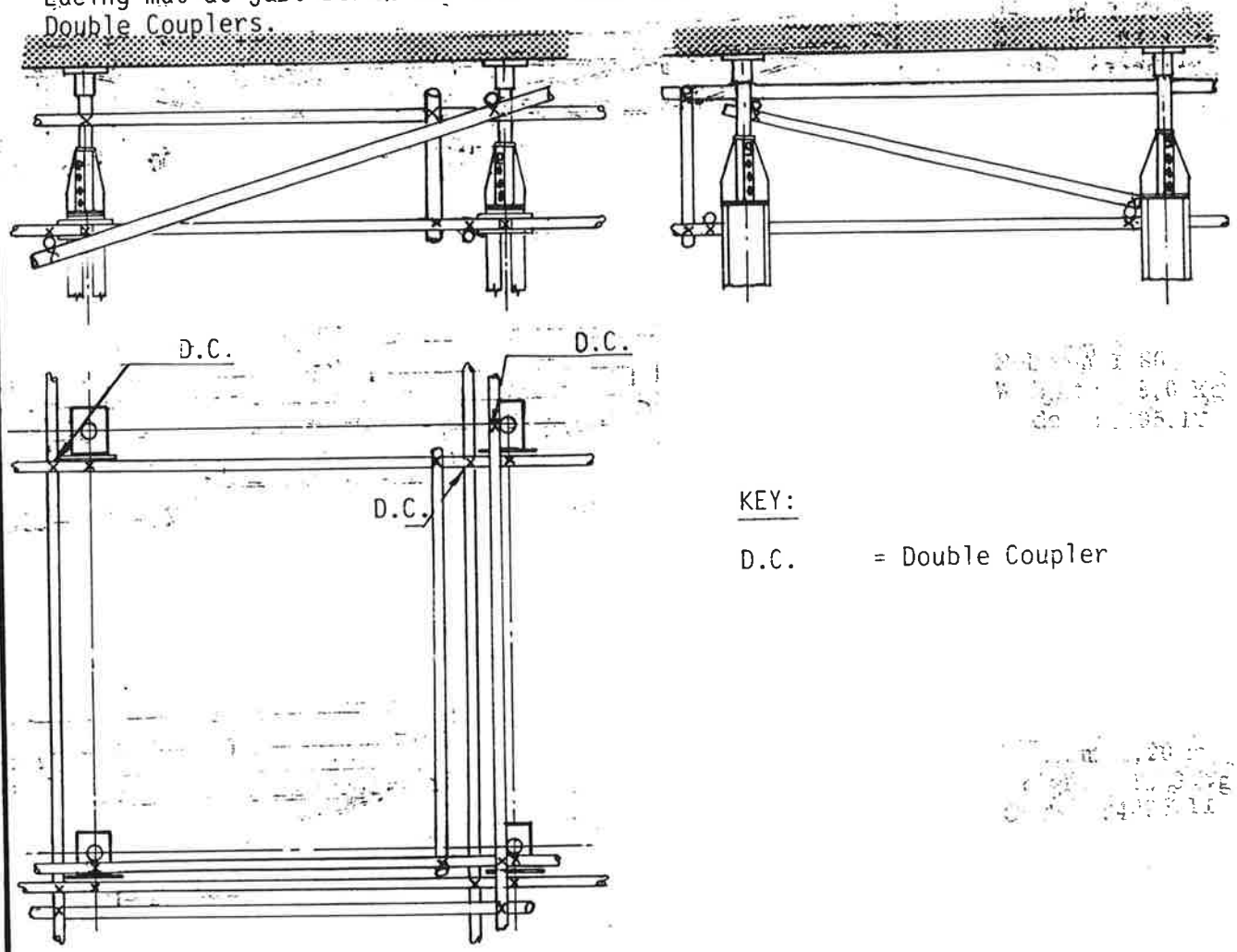

KEY:

D.C. = Double Coupler

Jacks can be braced in various ways, using a lacing mat at Head/Base Plate level and using Double Couplers (shown above). An alternative arrangement is to use Swivel Couplers (shown on page 95).

Using the method shown, the lacing mat at Head/Base Plate level need only run between jacks to be braced i.e. bridle tube.

Copyright owned by S.G.B. Group p.l.c. Mitcham, Surrey. Reproduction or disclosure to third parties in any form whatsoever is not allowed without the written consent of the proprietors. © Copyright S.G.B. Group p.l.c. 19

Copyright ist Eigentum der S.G.B. Group p.l.c. Mitcham, Surrey. Vervielfältigung oder Bekanntgabe an Dritte, in welcher Form auch, ohne schriftliche Genehmigung der Eigentümerin nicht gestattet.

Copyright est la propriété de S.G.B. Group p.l.c. Mitcham, Surrey. La reproduction ou la communication à des tiers, sous quelque forme que ce soit n'est permise qu'avec l'autorisation écrite du propriétaire.

Copyright In bezit van S.G.B. Group p.l.c. Mitcham, Surrey. Vermenigvuldiging of mededeling aan derden in welke vorm dan ook, is zonder schriftelijke toestemming van eigenaars niet geoorloofd.

SGB GROUP p.l.c.
WILLOW LANE MITCHAM
SURREY Tel. 01-648 3400

MK II STEEL SOLDIER SYSTEM

INTERNAL CORNER SOLDIER
CORNER SOLDIER UNITS

Ref No. J29
Page No. 100
Date January 1985

GROUP RESEARCH AND DEVELOPMENT DIVISION

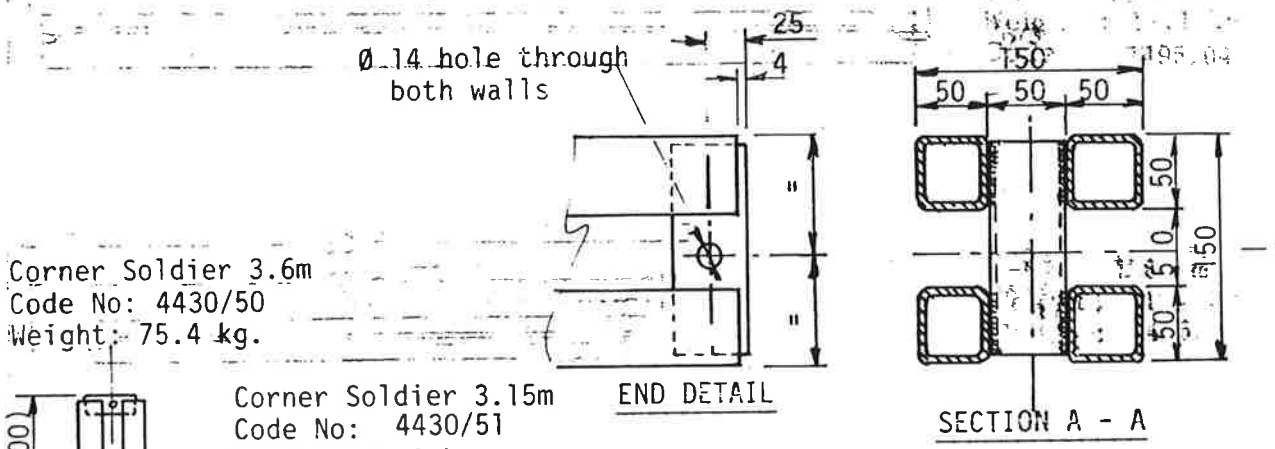

Corner Soldier 3.6m
Code No: 4430/50
Weight: 75.4 kg.

Corner Soldier 3.15m
Code No: 4430/51
Weight: 66.3 kg

Corner Soldier 2.7m
Code No: 4430/52
Weight: 56.6 kg

Corner Soldier 1.8m
Code No: 4430/53
Weight: 38 kg

Corner Soldier 1.125m
Code No: 4430/54
Weight: 24.1 kg

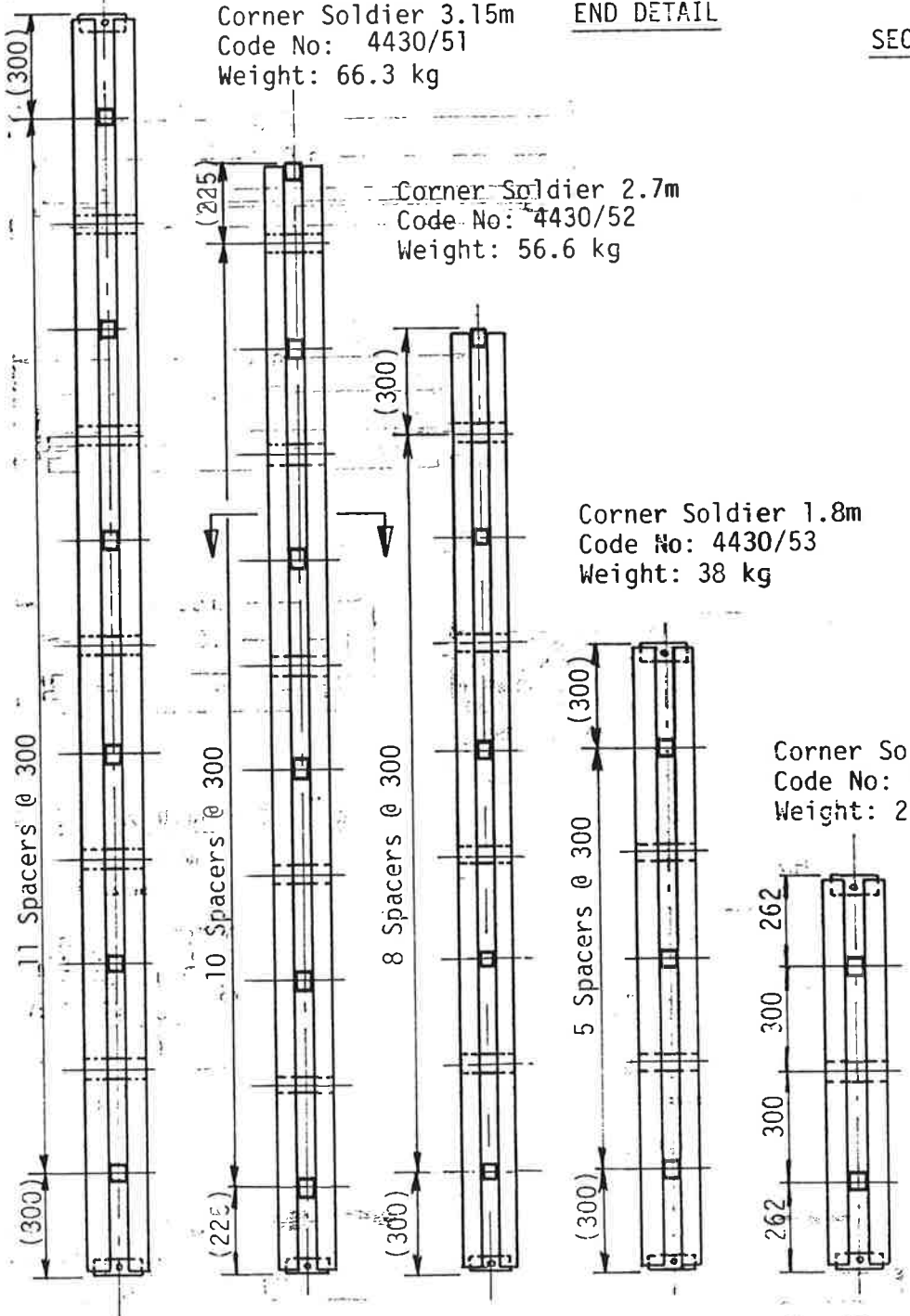

Copyright owned by S.G.B. Group p.l.c. Mitcham, Surrey. Reproduction or disclosure to third parties in any form whatsoever is not allowed without the written consent of the proprietors. ©Copyright S.G.B. Group p.l.c. 19

Copyright est la propriété de S.G.B. Group p.l.c. Mitcham, Surrey. La reproduction ou la communication à des tiers, sous quelque forme que ce soit n'est permise qu'avec l'autorisation écrite du propriétaire.

Copyright ist Eigentum der S.G.B. Group p.l.c. Mitcham, Surrey. Vervielfältigung oder Bekanntgabe an Dritte, in welcher Form auch, ohne schriftliche Genehmigung der Eigentümerin nicht gestattet.

Copyright in bezit van S.G.B. Group p.l.c. Mitcham, Surrey. Vermenigvuldiging of mededeling aan derden in welke vorm dan ook, is zonder schriftelijke toestemming van eigenares niet geoorloofd.

SGB GROUP p.l.c.
WILLOW LANE MITCHAM
SURREY Tel. 01-648 3400

MK II STEEL SOLDIER SYSTEM -INTERNAL CORNER SOLDIER- DETAILS OF ANCILLARY COMPONENTS

Ref No. J29
Page No. 101
Date January 1985
GROUP RESEARCH AND DEVELOPMENT DIVISION

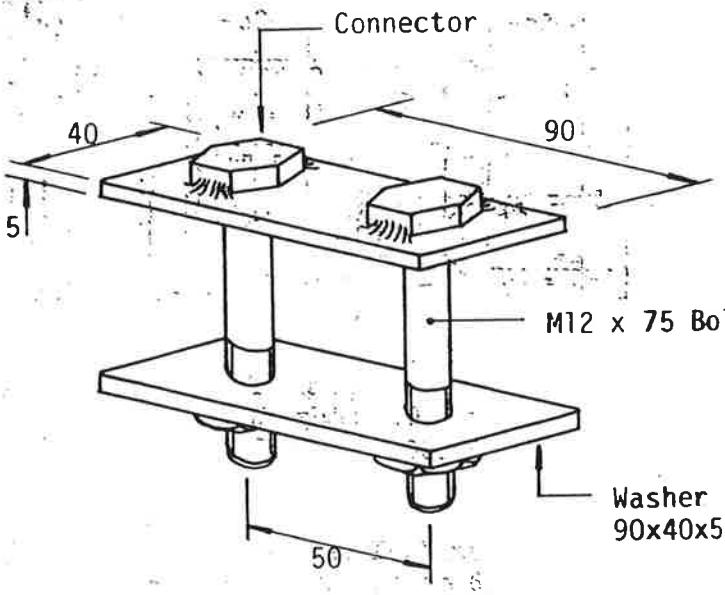

Corner Soldier Connector

Code No: 4430/60
Weight: 0.45 kg

Used for soldiers connecting end to end. See page 105 for details.

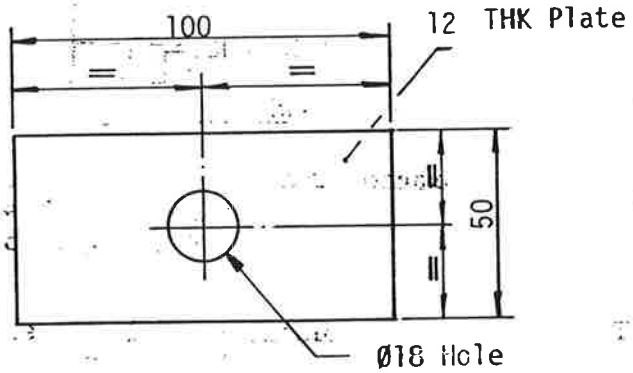

Washer for use with J-Bolt. Fixing timber walings to corner soldier

Code No: 4430/61
Weight: 0.44 kg

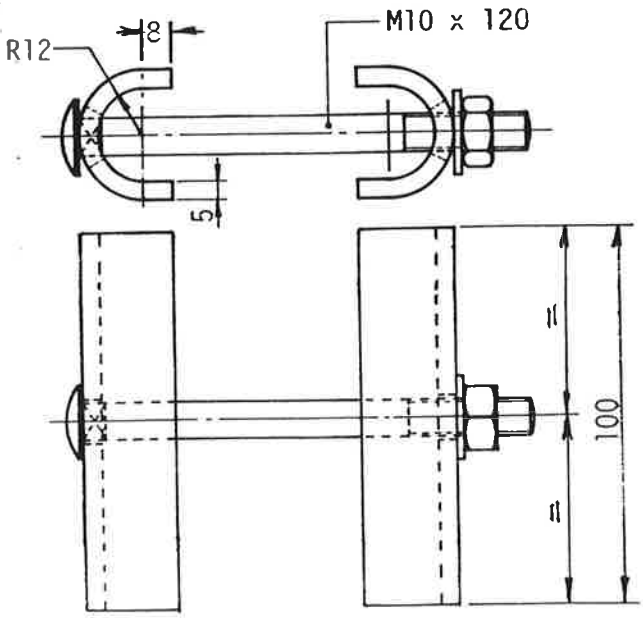

Waling Clamp

Code No: 4430/62
Weight: 0.59 kg

Copyright owned by S.G.B. Group p.l.c. Mitcham, Surrey. Reproduction or disclosure to third parties in any form whatsoever is not allowed without the written consent of the proprietors. © Copyright S.G.B. Group p.l.c. 19
Copyright est la propriété de S.G. Group p.l.c. Mitcham, Surrey. La reproduction ou la communication à des tiers, sous quelque forme que ce soit n'est permise qu'avec l'autorisation écrite du propriétaire.
Copyright ist Eigentum der S. Group p.l.c. Mitcham, Surrey. Vervielfältigung oder Bekanntgabe an Dritte, in welcher Form auch, ohne schriftliche Genehmigung der Eigentümerin nicht gestattet.
Copyright in bezit van S.G.B. Group p.l.c. Mitcham, Surrey. Vermenigvuldiging of mededeling aan derden in welke vorm dan ook, is zonder schriftelijke toestemming van eigenares niet geoorloofd.

SGB GROUP p.l.c.
WILLOW LANE MITCHAM
SURREY Tel. 01-648 3400

MK II STEEL SOLDIER SYSTEM
INTERNAL CORNER SOLDIER
CONNECTION OF CORNER SOLDIER UNITS

Ref No. J29
Page No. 105
Date January 1985
GROUP RESEARCH AND DEVELOPMENT DIVISION

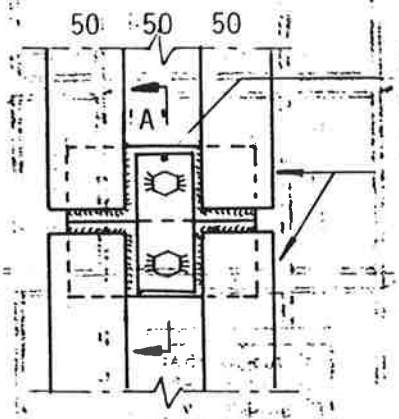

CORNER SOLDIER CONNECTION

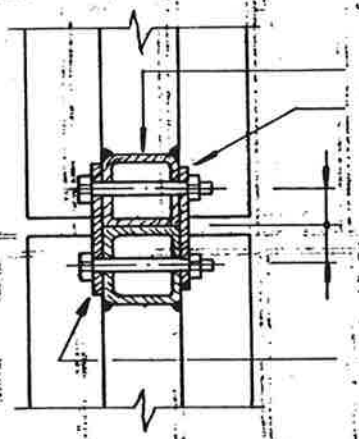

SECTION 'A' - 'A'

Corner Soldiers may be placed end to end and connected by use of a corner soldier connector bolted through both end spacers as shown on the left.

Copyright owned by S.G.B. Group p.l.c. Mitcham, Surrey. Reproduction or disclosure to third parties in any form whatsoever is not allowed without the written consent of the proprietors. ©Copyright S.G.B. Group p.l.c. 19

Copyright ist Eigentum der S.G.B. Group p.l.c. Mitcham, Surrey. Vervielfältigung oder Bekanntgabe an Dritte, in welcher Form auch, ohne schriftliche Genehmigung der Eigentümerin nicht gestattet.

Copyright est la propriété de S.G.B. Group p.l.c. Mitcham, Surrey. La reproduction ou la communication à des tiers, sous quelque forme que ce soit n'est permise qu'avec l'autorisation écrite du propriétaire.

Copyright in bezit van S.G.B. Group p.l.c. Mitcham, Surrey. Vermenigvuldiging of mededeling aan derden in welke vorm dan ook, is zonder schriftelijke toestemming van eigenares niet geoorloofd.

SGB GROUP p.l.c.
WILLOW LANE MITCHAM
SURREY Tel. 01-648 3400

MK II STEEL SOLDIER SYSTEM
- INTERNAL CORNER SOLDIER -
USE OF ANCILLARY COMPONENTS

Ref No. J29
Page No. 106
Date January 1985
GROUP RESEARCH AND DEVELOPMENT DIVISION

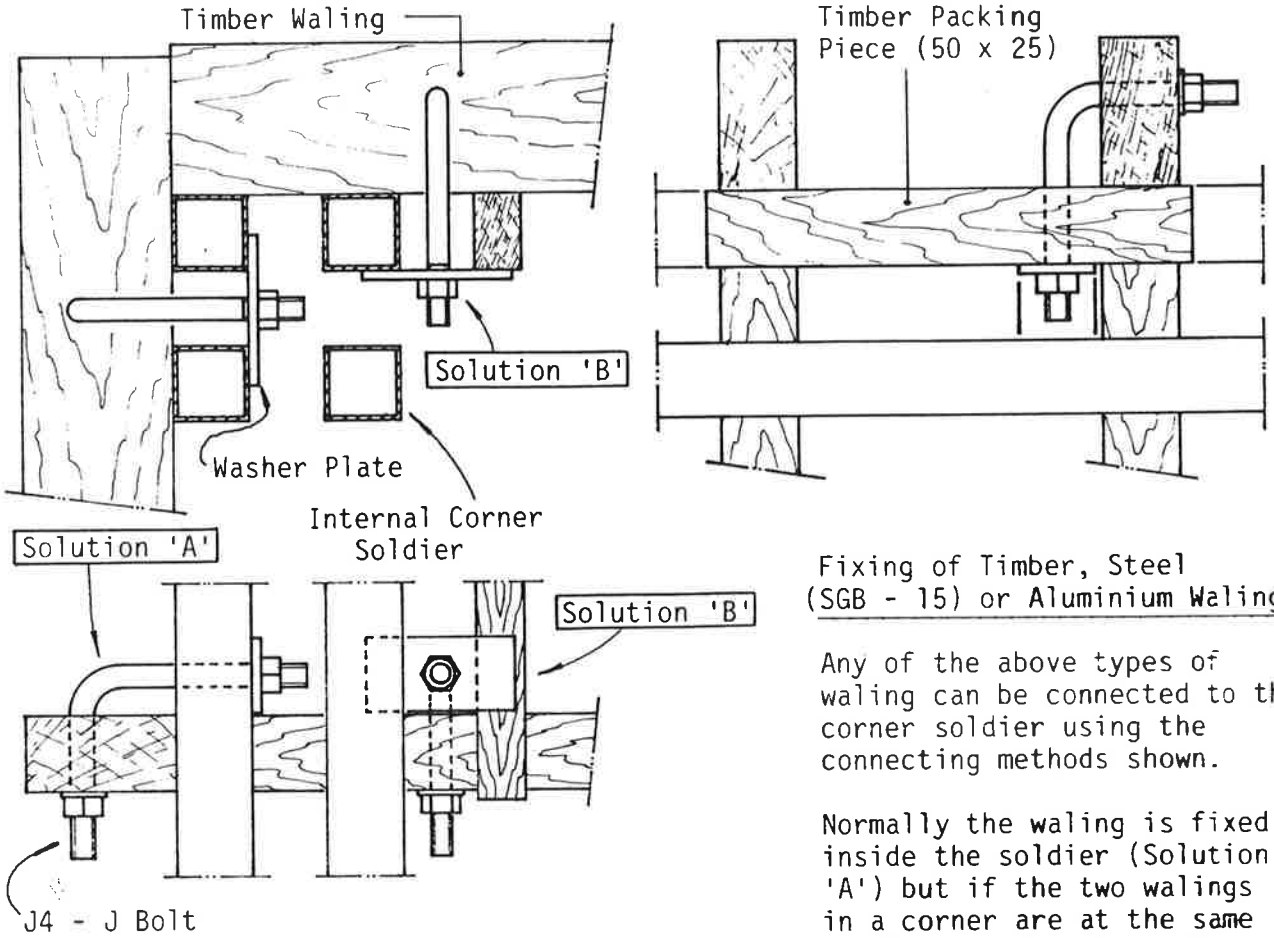

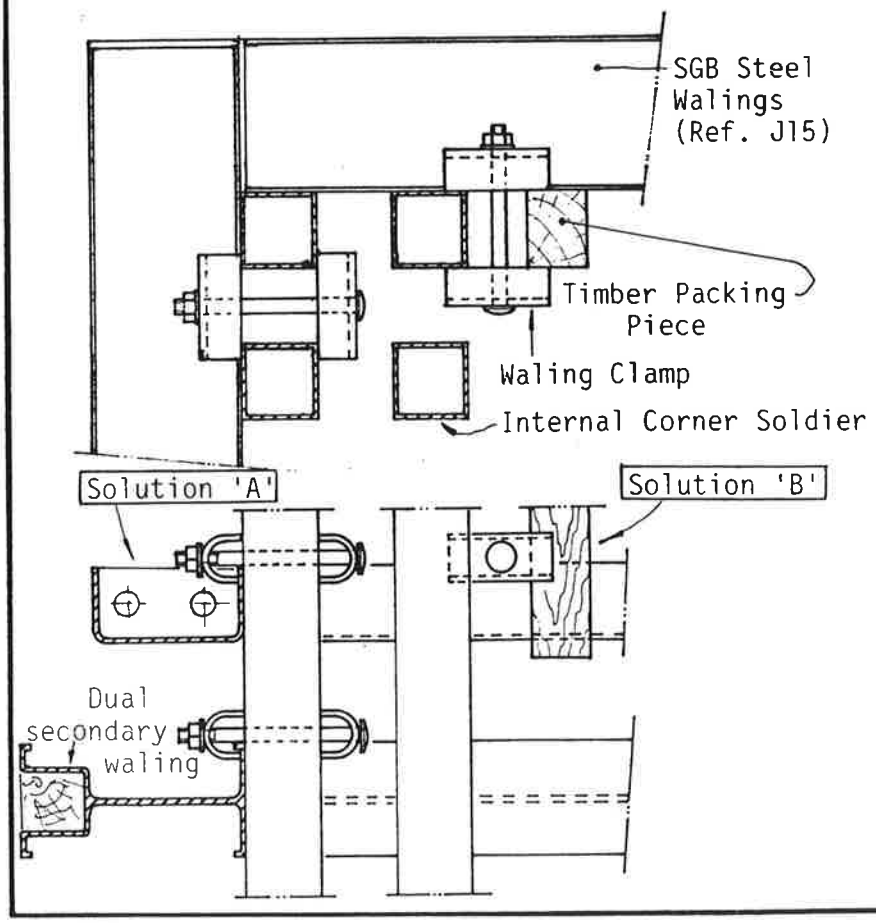

Fixing of Timber, Steel (SGB - 15) or Aluminium Walings

Any of the above types of waling can be connected to the corner soldier using the connecting methods shown.

Normally the waling is fixed inside the soldier (Solution 'A') but if the two walings in a corner are at the same level, Solution 'B' must be used for the second waling. Solution 'B' is also preferable if one form face has to be released from the soldier for striking and moving. In solution 'B' the timber packing must run vertically between two adjacent walings.

When crane handling forms with the corner soldier attached to one end, lifting will normally be done from the main soldier. In this case the walings 'lift' the corner soldier and the clamps should be fitted to the top edge of the waling as shown in the bottom diagram. Steel walings may be alternated facing up/facing down for additional security.

Copyright owned by S.G.B. Group p.l.c. Mitcham, Surrey. Reproduction or disclosure to third parties in any form whatsoever is not allowed without the written consent of the proprietors. ©Copyright S.G.B Group p.l.c. 19
Copyright ist Eigentum der S.G.B. Group p.l.c. Mitcham, Surrey. Vervielfältigung oder Bekanntgabe an Dritte, in welcher Form auch, ohne schriftliche Genehmigung der Eigentümerin nicht gestattet.
Copyright est la propriété de S.G.B. Group p.l.c. Mitcham, Surrey. La reproduction ou la communication à des tiers, sous quelque forme que ce soit n'est permise qu'avec l'autorisation écrite du propriétaire.
Copyright in bezit van S.G.B. Group p.l.c. Mitcham, Surrey. Vermenigvuldiging of mededeling aan derden in welke vorm dan ook, is zonder schriftelijke toestemming van eigenares niet geoorloofd.

SGB GROUP p.l.c.
WILLOW LANE MITCHAM
SURREY Tel. 01-648 3400

MK II STEEL SOLDIER SYSTEM
INTERNAL CORNER SOLDIER
TYPICAL APPLICATIONS

Ref No. J29
Page No. 109
Date January 1985
GROUP RESEARCH AND DEVELOPMENT DIVISION

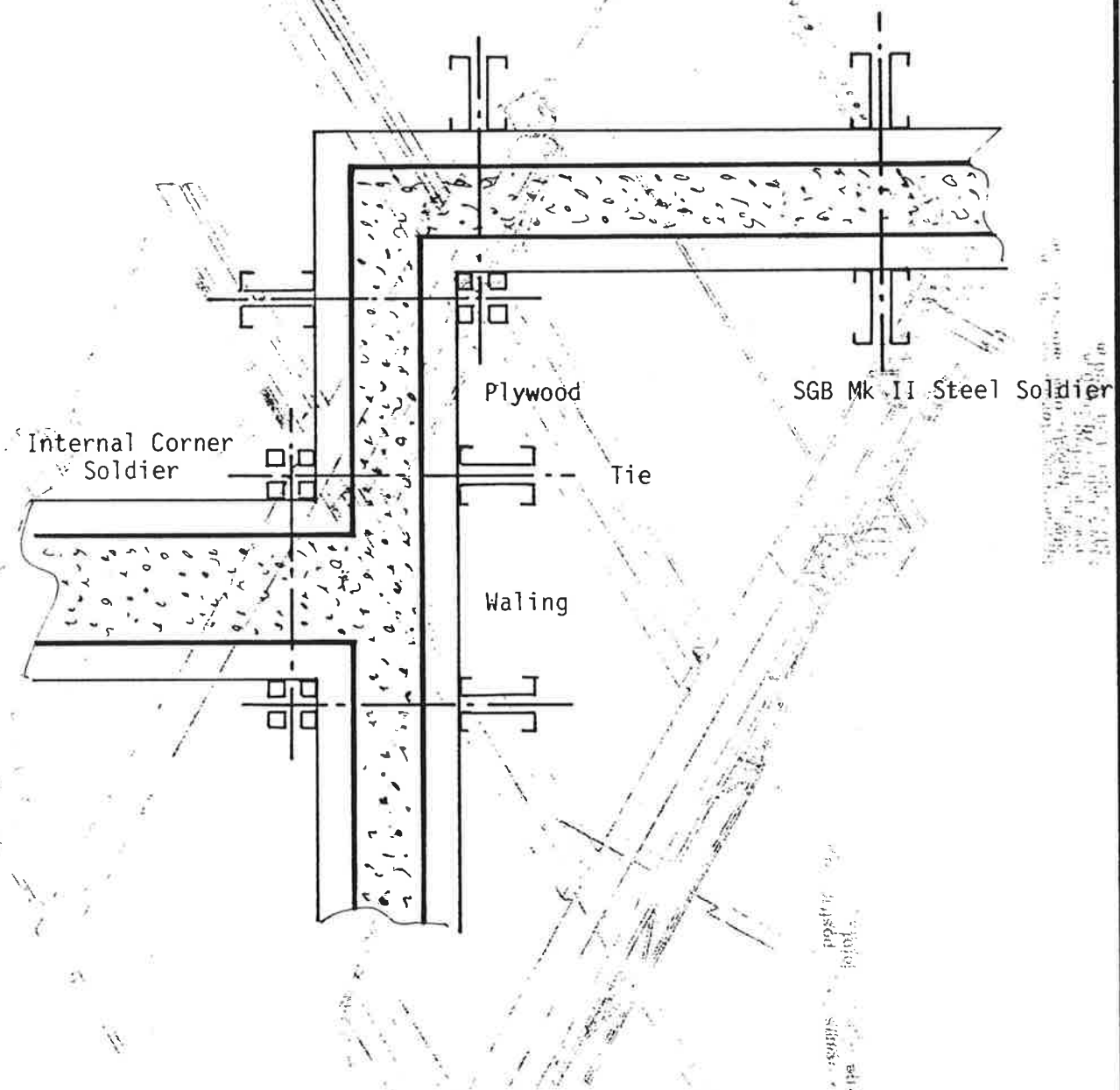

The above sketch shows typical applications for which the internal corner soldier can be used. It eliminates the use of 2 soldiers at close distance or the difficult connections of walings at internal corners and reduces the cantilever of the waling at the external corner.

Some typical methods of fixing walings to the corner soldier are shown on Page 106.

Copyright owned by S.G.B. Group p.l.c. Mitcham, Surrey. Reproduction or disclosure to third parties in any form whatsoever is not allowed without the written consent of the proprietors. ©Copyright S.G.B. Group p.l.c. 19

Copyright in bezit van S.G.B. Group p.l.c. Mitcham, Surrey. Vermenigvuldiging of mededeling aan derden in welke vorm dan ook, is zonder schriftelijke toestemming van eigenares niet geoorloofd.

Copyright est la propriété de S.G.B. Group p.l.c. Mitcham, Surrey. La reproduction ou la communication à des tiers, sous quelque forme que ce soit n'est permise qu'avec l'autorisation écrite du propriétaire.

Copyright ist Eigentum der S.G.B. Group p.l.c. Mitcham, Surrey. Vervielfältigung oder Bekanntgabe an Dritte, in welcher Form auch, ohne schriftliche Genehmigung der Eigentümerin nicht gestattet.

SGB GROUP p.l.c.
WILLOW LANE MITCHAM
SURREY Tel. 01-648 3400

MK II STEEL SOLDIER SYSTEM
INTERNAL CORNER SOLDIER
TECHNICAL DATA

Ref No. J29
Page No. 110
Date January 1985

GROUP RESEARCH AND DEVELOPMENT DIVISION

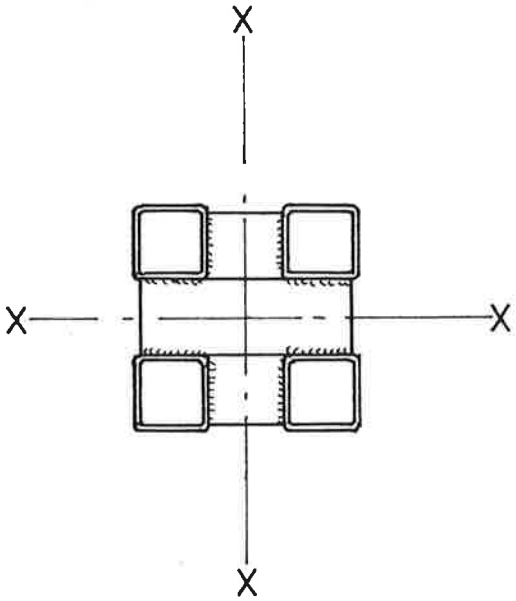

Permissible BM = 9.26 kN-m

EI (for deflection calc. purposes)
= 962 kN-m^2

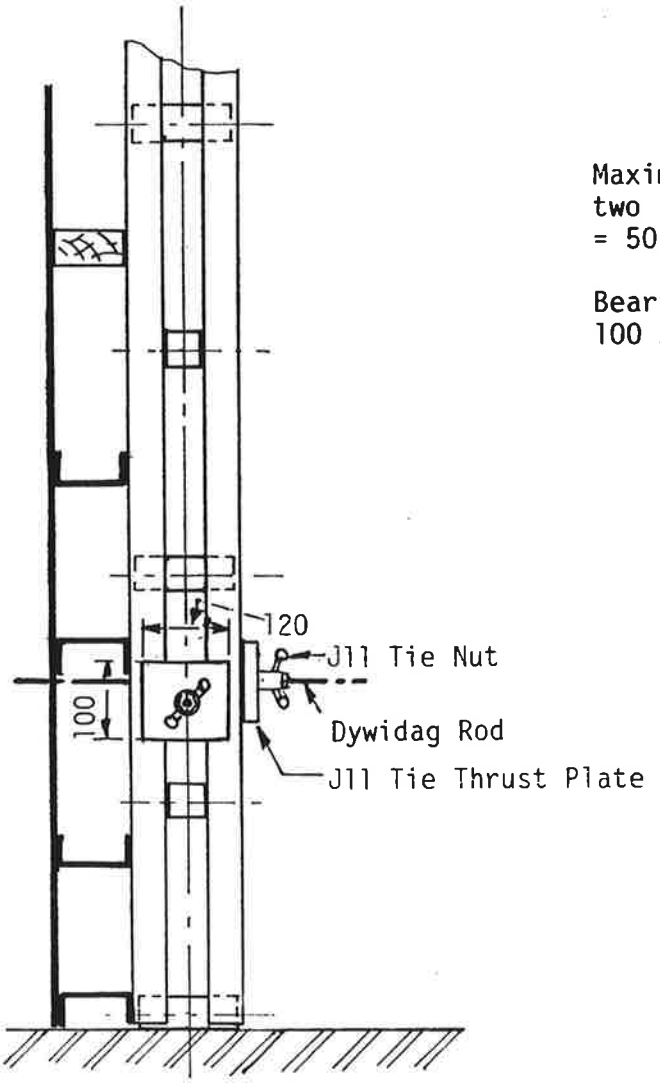

Maximum allowable tie load between two spacers in any one direction = 50 kN.

Bearing plate to be used must be 100 x 120mm minimum.

Copyright in bezit van S.G.B. Group p.l.c. Mitcham, Surrey. Vermenigvuldiging of mededeling aan derden in welke vorm dan ook, is zonder schriftelijke toestemming van eigenares niet geoorloofd.

Copyright est la propriété de S.G.B. Group p.l.c. Mitcham, Surrey. La reproduction ou la communication à des tiers, sous quelque forme que ce soit n'est permise qu'avec l'autorisation écrite du propriétaire.

Copyright ist Eigentum der S.G.B. Group p.l.c. Mitcham, Surrey. Vervielfältigung oder Bekanntgabe an Dritte, in welcher Form auch, ohne schriftliche Genehmigung der Eigentümerin nicht gestattet.

Copyright owned by S.G.B. Group p.l.c. Mitcham, Surrey. Reproduction or disclosure to third parties in any form whatsoever is not allowed without the written consent of the proprietors. ©Copyright S.G.B. Group p.l.c. 19

PAGE NO:	DATA SHEET
1.	Tie Rods
2.	Tie Nuts.
3.	Tie Thrust Plates for Steel Formwork.
4.	Use on SGB Strongback System and SGB Soldier System.
5.	Sleeving Cone; Plastic Sleeving and use.
6.	Sealing Nuts; Sealing Cone for Waterproof construction.
7.	Use of Swivel Thrust Plate.
8.	Use of Swivel Thrust Plate continued.
9.	Tie Thrust Plates for Timber Formwork.

MK II TIE WASHER

Code No: 4430/20
Weight: 1.60 kg

May be used in conjunction with heavy Duty Ties and Tie Nut

For details of ties see data sheets ref. no. J11

S.W.L. = 115 kN

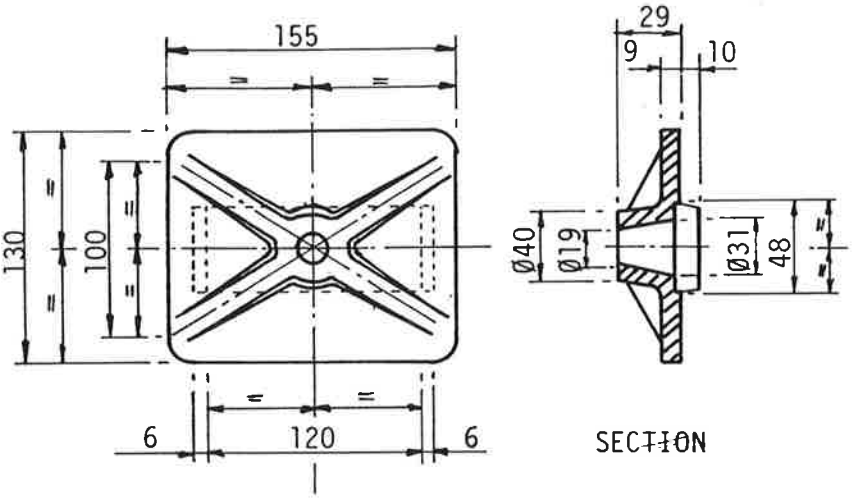

END TIE WASHER

Code No: 4430/34
Weight: 0.65 kg

Used for fixing a Soldier at right angles onto the End Plate of another Soldier.
For illustration see page 24.
S.W.L. = 60 kN

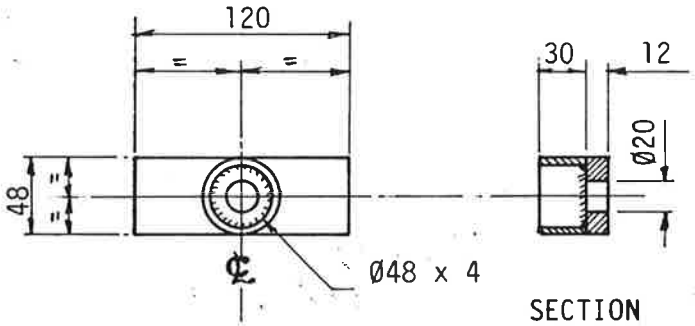

Copyright in bezit van S.G.B. Group p.l.c. Mitcham, Surrey. Vermenigvuldiging of mededeling aan derden in welke vorm dan ook, is zonder schriftelijke toestemming van eigenares niet geoorloofd.

Copyright est la propriété de S.G.B. Group p.l.c. Mitcham, Surrey. La reproduction ou la communication à des tiers, sous quelque forme que ce soit n'est permise qu'avec l'autorisation écrite du propriétaire.

Copyright ist Eigentum der S.G.B. Group p.l.c. Mitcham, Surrey. Vervielfältigung oder Bekanntgabe an Dritte, in welcher Form auch, ohne schriftliche Genehmigung der Eigentümerin nicht gestattet.

Copyright owned by S.G.B. Group p.l.c. Mitcham, Surrey. Reproduction or disclosure to third parties in any form whatsoever is not allowed without the written consent of the proprietors. © Copyright S.G.B. Group p.l.c. 19

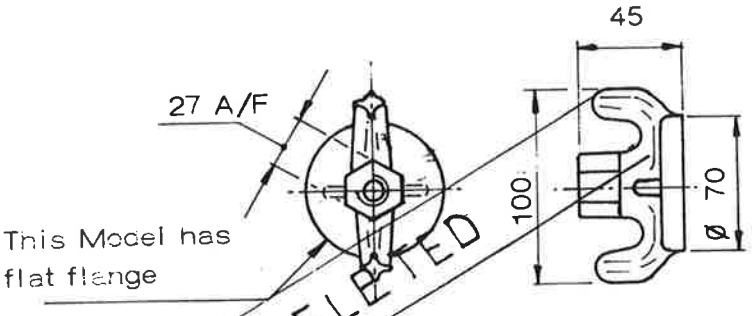

DELETED

2) TIE NUT (SOLDIER ONLY)

Code No: 4218/21
Weight: 0.5 kg
S.W.L: 80 kN (Must be used with Thrust Plate 7 or 8

This type now obsolescent; stock will not be replaced.

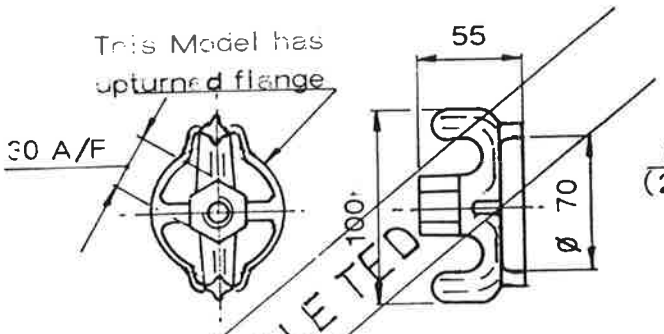

DELETED

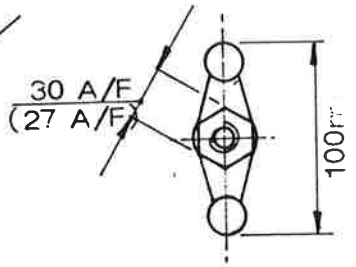

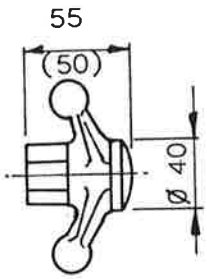

3) TIE NUT MK II (STRONGBACK)

Code No: 4218/52
Weight: 0.5 kg
Failure Load greater than that of the Tie Rod.

4) TIE NUT (THRUSTPLATE).

Code No: 4218/39
Weight: 0.3 kg
Failure Load greater than that of the Tie Rod.

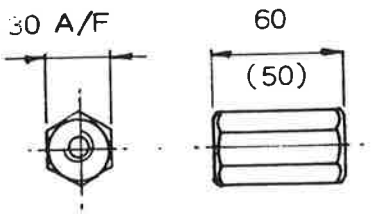

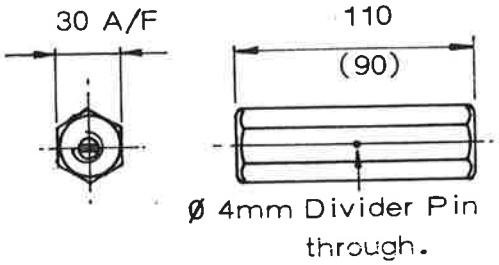

5) HEXAGON NUT

Code No: 4218/22
Weight: 0.23 kg
Failure Load greater than that of Tie Rod.

6) JOINT NUT

Code No: 4218/23
Weight: 0.41 kg
Failure Load greater than that of Tie Rod.

Dimensions in Brackets refer to early production stock.

Property of (S.G.B. Group Limited Mitcham Surrey). Reproduction or disclosure to third parties in any form is not permitted without the written consent of (S.G.B. Group Limited Mitcham Surrey). Eigentum der (S.G.B. Group Limited Mitcham Surrey). Vervielfältigung oder Weitergabe an dritte, welcher Art auch, ohne schriftliche Genehmigung der (S.G.B. Group Limited Mitcham Surrey) ist nicht gestattet. Propriété de la (S.G.B. Group Limited Mitcham Surrey). La reproduction ou communication de ce document à des tiers sans l'autorisation écrite de la (S.G.B. Group Limited Mitcham Surrey) est interdite.

SGB GROUP LIMITED
WILLOW LANE
MITCHAM
SURREY
Tel 01 648 3400

HEAVY DUTY TIES
TIE RODS

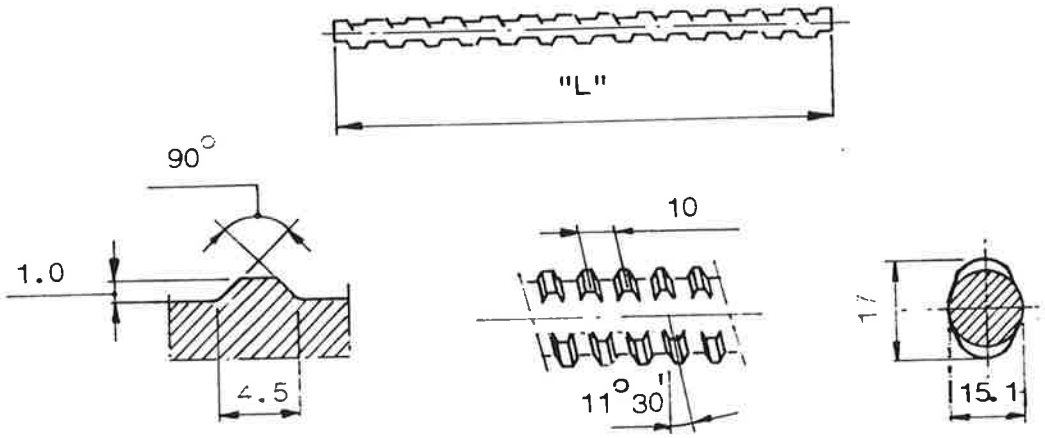

1) TIE ROD Ø 15.1 mm

Weight: 1.5 kg/m

Ultimate load		190 kN	(19.4 tf)
For a F.O.S.	= 1.50 S.W.L.	= 127 kN	(12.9 tf)
For a F.O.S.	= 1.60 S.W.L.	= 119 kN	(12.1 tf)
For a F.O.S.	= 1.75 S.W.L.	= 109 kN	(11.1 tf)
For a F.O.S.	= 2.00 S.W.L.	= 95 kN	(9.7 tf)
For a F.O.S.	= 2.25 S.W.L.	= 84 kN	(8.6 tf)

Yield Point of Tie Rod approx. 80% Ultimate Load.

"L"	CODE NO:
0.67m	**4218/54**
1.00m	4218/26
1.33m	4218/25
1.66m	4218/27
2.00m	4218/28

Longer lengths are available to special order

S.W.L. = Safe Working Load
F.O.S. = Factor of Safety

ISSUED BY SGB GROUP RESEARCH AND DEVELOPMENT DIVISION - MITCHAM, ENGLAND.

Property of (S.G.B. Group Limited Mitcham Surrey). Eigendom van (S.G.B. Group Limited Mitcham Surrey). Propriété de la (S.G.B. Group Limited Mitcham Surrey). Eigentum der (S.G.B. Group Limited Mitcham Surrey).

WILLOW LANE
MITCHAM
SURREY
Tel 01-648-3400

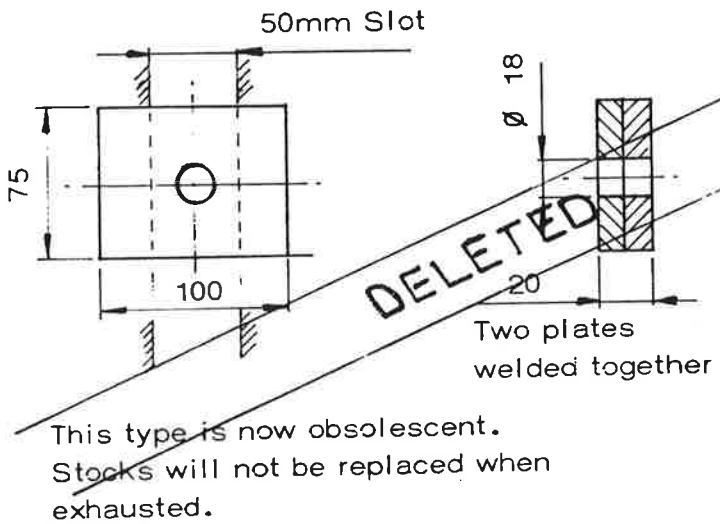

Two plates welded together

This type is now obsolescent. Stocks will not be replaced when exhausted.

7) TIE THRUST PLATE

Code No: 4431/16
Weight: 1.1 kg
S.W.L. 50 kN
when supported over 50mm slot.

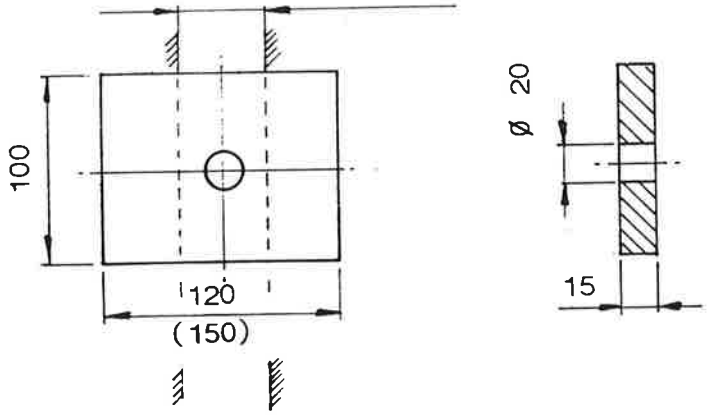

8) TIE THRUST PLATE

Code No: 4218/50
Weight: 1.4 kg
S.W.L: 120 kN
when supported over 50mm slot.

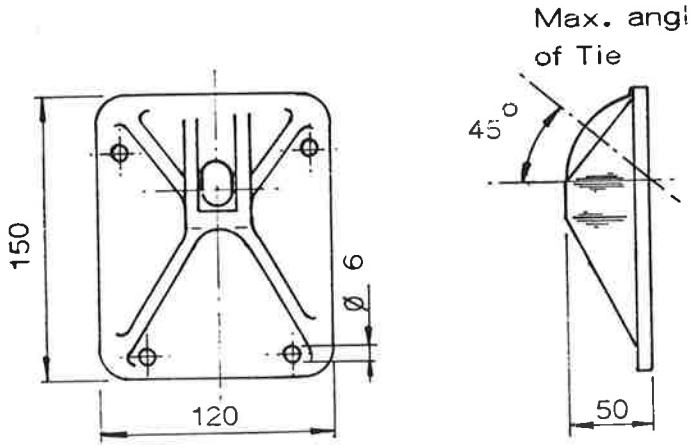

9) SWIVEL THRUST PLATE

Code No: 4218/51
Weight: kg
S.W.L: 120 kN
when supported over 50mm slot.

Dimensions in brackets refer to early production stock.

Property of I.S.G.B. Group Limited Mitcham Surrey). Eigendom van (S.G.B. Group Limited Mitcham Surrey). Propriété de la (S.G.B. Group Limited Mitcham Surrey). Eigentum der (S.G.B. Group Limited Mitcham Surrey).

SGB GROUP LIMITED

HEAVY DUTY TIES
USE ON SGB STRONGBACK SYSTEM
AND ON SGB SOLDIER SYSTEM.

WILLOW LANE
MITCHAM
SURREY
Tel·01·648·3400

Ref No. J11
Page No. 4
Date Jan. 1978

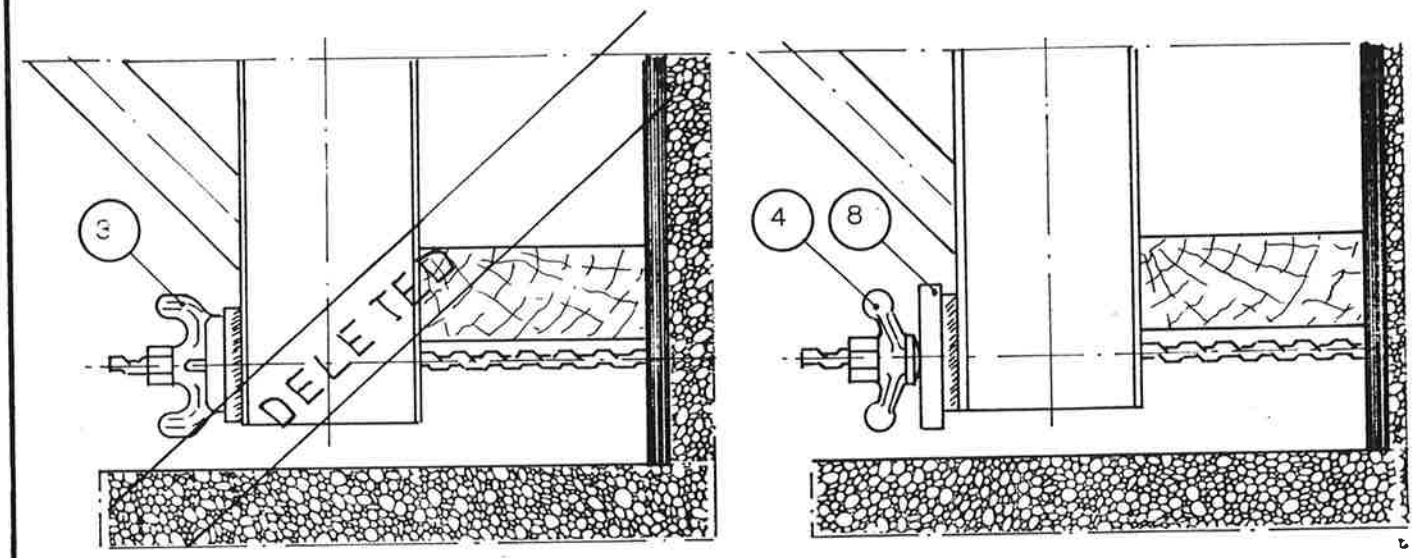

FORMWORK USING SGB STRONGBACK SYSTEM

The Strongback is provided with a bearing pad adequate to take the load from the Tie. If ties are used in the middle of the Strongback use Tie Thrust Plate Type 8 and Tie Nut 4.
Tie Nut 4 and Tie Plate 8, should be used at end of Strongback as shown.

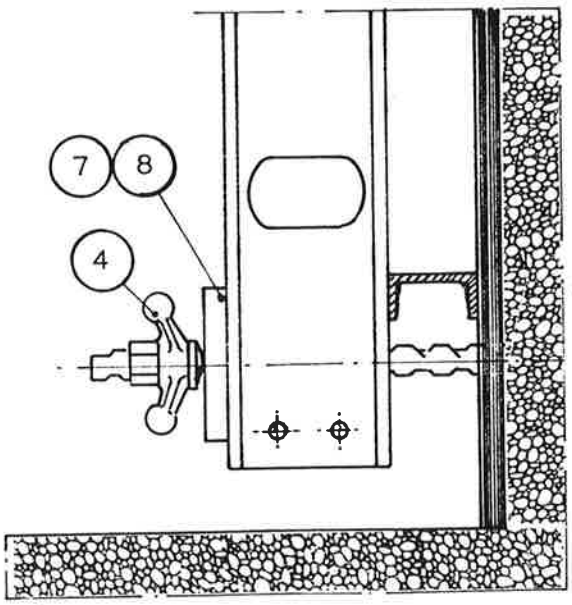

FORMWORK USING SGB SOLDIER SYSTEM.

When using SGB Soldiers, a Tie Thrust Plate 7 or 8 together with Tie Nut, Item 4. is required to transmit the load from the Tie Rod to the Soldier.
Tie Nuts item 2 or 3 may be used instead of item 4, if required, with Thrust Plates.
This arrangement can be used anywhere along the length of the Soldiers.

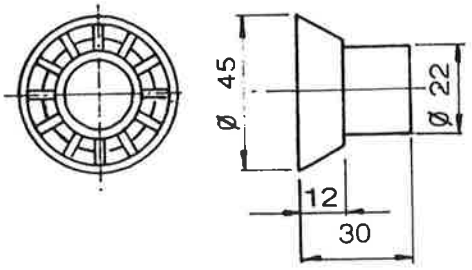

10) SLEEVING CONE

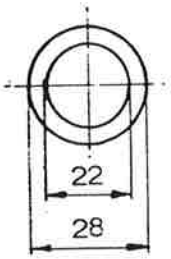

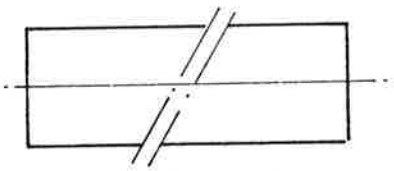

Supplied in lengths of 2m and 3m.

11) PLASTIC SLEEVING (for Tie Rod)

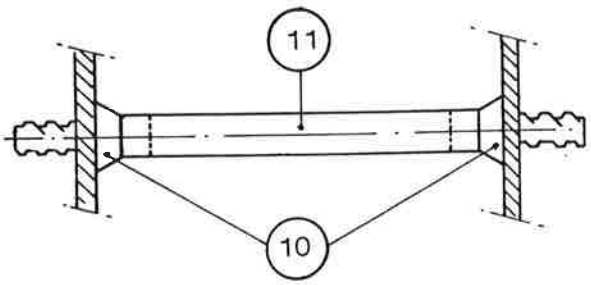

USE OF PLASTIC SLEEVING

The Sleeving Cone 10 has a recess to take the end of the Plastic Sleeving 11.
This should be cut to length to suit the wall thickness.
After concreting, the Tie can be recovered, the Sleeving Cone can be removed and the hole in the concrete made good.
The required length of Plastic Sleeving Cone is:- Wall Thickness less 24mm.

Property of (S.G.B. Group Limited Mitcham Surrey). Reproduction or disclosure to third parties, in any form whatsoever, not permitted without written consent.
Eigentum der (S.G.B. Group Limited Mitcham Surrey). Vervielfältigung oder Bekanntgabe an Dritte, in welcher Form auch, ist ohne schriftliche Genehmigung der (S.G.B. Group Limited Mitcham Surrey) nicht gestattet.
Propriété de la (S.G.B. Group Limited Mitcham Surrey). La reproduction ou la communication à des tiers sous quelque forme que ce soit, est interdite sans l'autorisation écrite de la (S.G.B. Group Limited Mitcham Surrey).
Eigendom van (S.G.B. Group Limited Mitcham Surrey). Vermenigvuldiging of mededeling aan derden in welke vorm dan ook is zonder voorafgaande schriftelijke toestemming van (S.G.B. Group Limited Mitcham Surrey) niet geoorloofd.

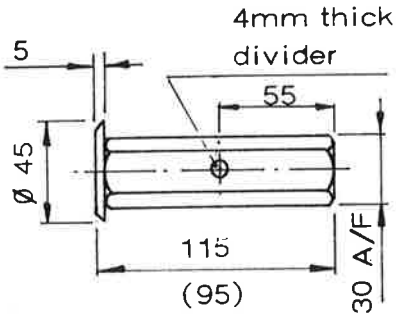

12) SEALING NUT

Code No: 4218/45
Weight: 0.44 kg
Failure load greater than that of tie.

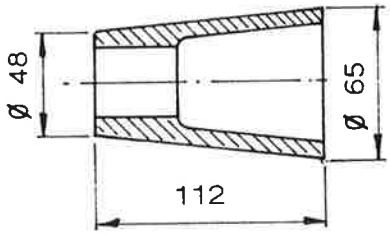

13) SEALING CONE.

Note: This is slightly longer than the Sealing Nut to prevent grout behind cone.

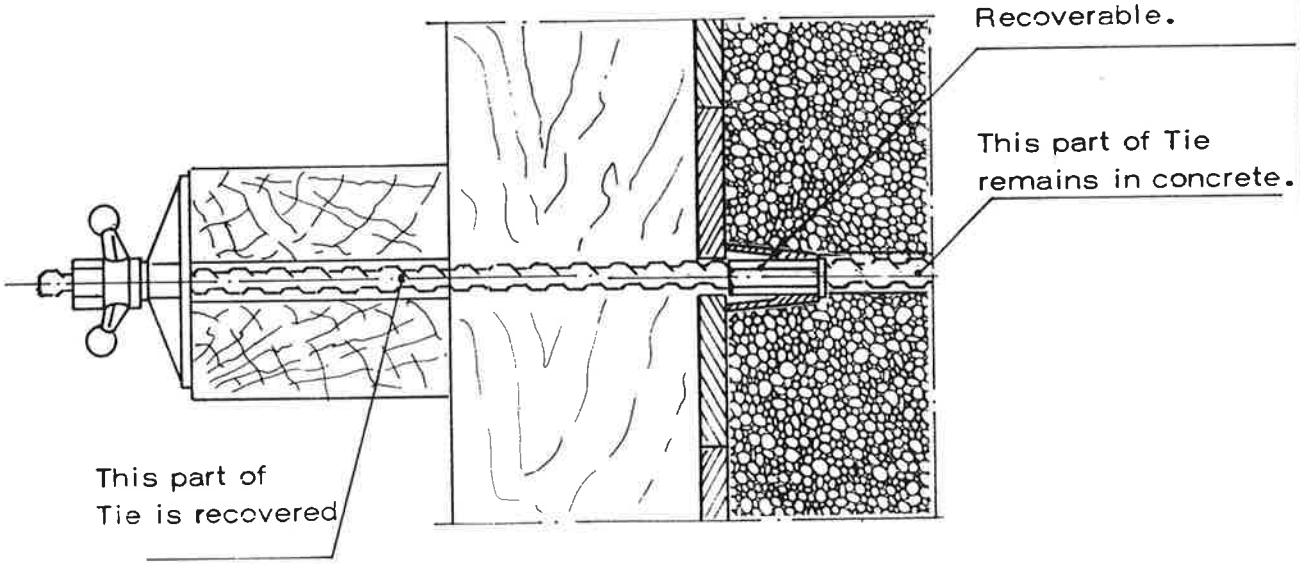

USE OF SEALING NUT AND SEALING CONE

For waterproof construction three lengths of Tie Rod are used, joined at the concrete surface by the Sealing Nut. This is encased in the Sealing Cone. After concreting the end tie sections, the Cone and the Nut can be recovered and the conical recess in the concrete can be made good.
The length of rod remaining in the concrete is:
Wall thickness less 118mm.

Property of (S.G.B. Group Limited Mitcham Surrey). Reproduction or disclosure to third parties, in any form whatsoever, not permitted without written consent.
Eigentum der (S.G.B. Group Limited Mitcham Surrey). Vervielfältigung oder Bekanntgabe an Dritte in welcher Form auch immer ist nicht gestattet.
Propriété de la (S.G.B. Group Limited Mitcham Surrey). La reproduction ou la communication de la présente à des tiers sous quelque forme que ce soit est interdite sauf autorisation écrite préalable.
Eigendom van (S.G.B. Group Limited Mitcham Surrey). Verveelvoudiging of bekendmaking aan derden in welke vorm dan ook is zonder voorafgaande schriftelijke toestemming verboden.

SGB GROUP LIMITED | HEAVY DUTY TIES USE OF SWIVEL THRUST PLATE | WILLOW LANE MITCHAM SURREY Tel·01·648·3400 | Ref No. J11 Page No. 7 Date Jan. 76

Tie Swivel Thrust Plate, Item 9, with Tie Thrust Plate, Item 8, and Tie Nut, Item 4, used in combination with Sealing Cone, Item 13, and Sealing Nut, Item 12, will enable angles up to 20° to be constructed. Instead of Tie Nut, Item 4, Tie Nut, Item 3, may be used. Tie Thrust Plate, Item 8, may then be left out.

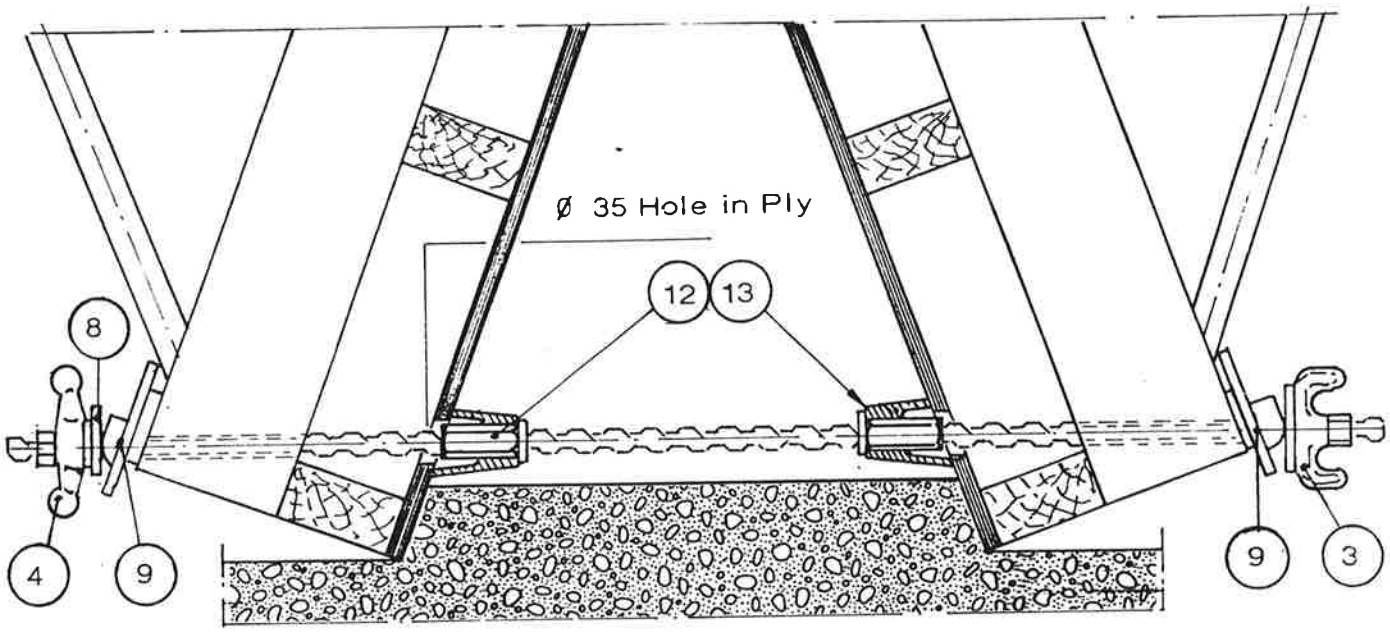

Detail of cutting Sealing Cone, Item 13.

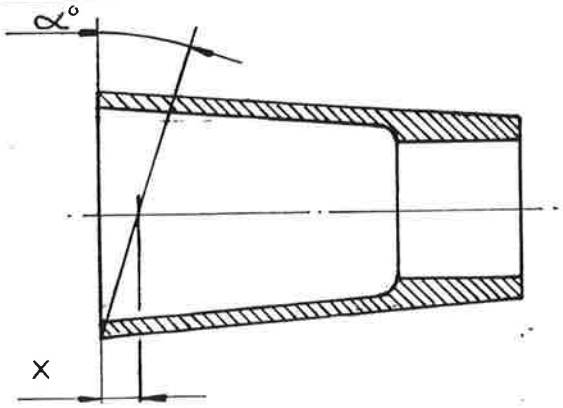

Cut or grind the Sealing Cone, Item 13, down to the angle required.
The reduction in axial length is shown in the table below.
The length of Tie remaining in the concrete is then:-
Wall thickness (on axis) minus 118mm plus 2X .

α°	X
5°	2.8mm
10°	5.6mm
15°	8.4mm
20°	11.1mm

WILLOW LANE
MITCHAM
SURREY
Tel·01·648·3400

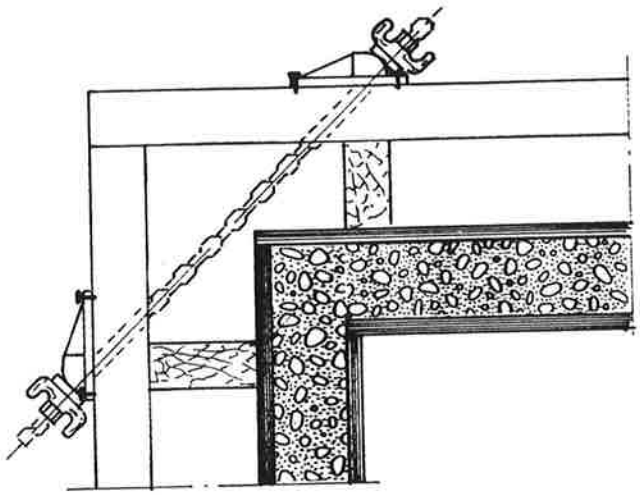

EXTERNAL CORNER TIES.

By using the Swivel Thrust Plate at the corner the ties do not have to pass through the concrete; the Swivel Thrust Plate must be prevented from sliding towards the corner by adequate fixings.

Property of (S.G.B. Group Limited Mitcham Surrey). Eigendom van (S.G.B. Group Limited Mitcham Surrey). Propriété de la (S.G.B. Group Limited Mitcham Surrey).

WILLOW LANE
MITCHAM
SURREY
Tel 01-648-3400

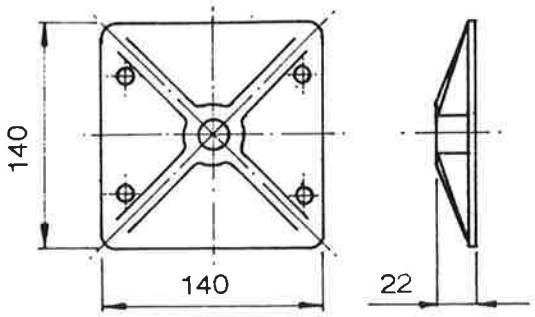

14) TIE THRUST PLATE

Code No: 4218/37
Weight: 0.8 kg

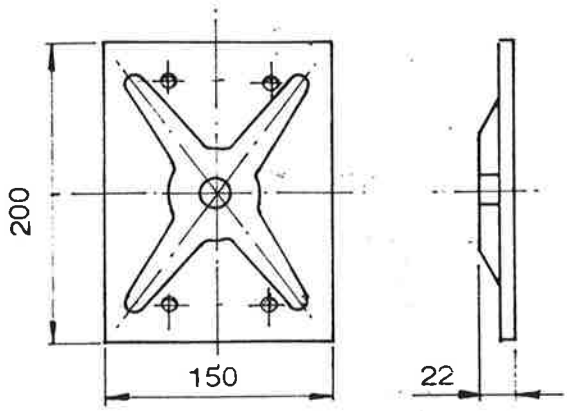

15) TIE THRUST PLATE

Code No: 4218/38
Weight: 1.8 kg

USE ON TIMBER FORMWORK

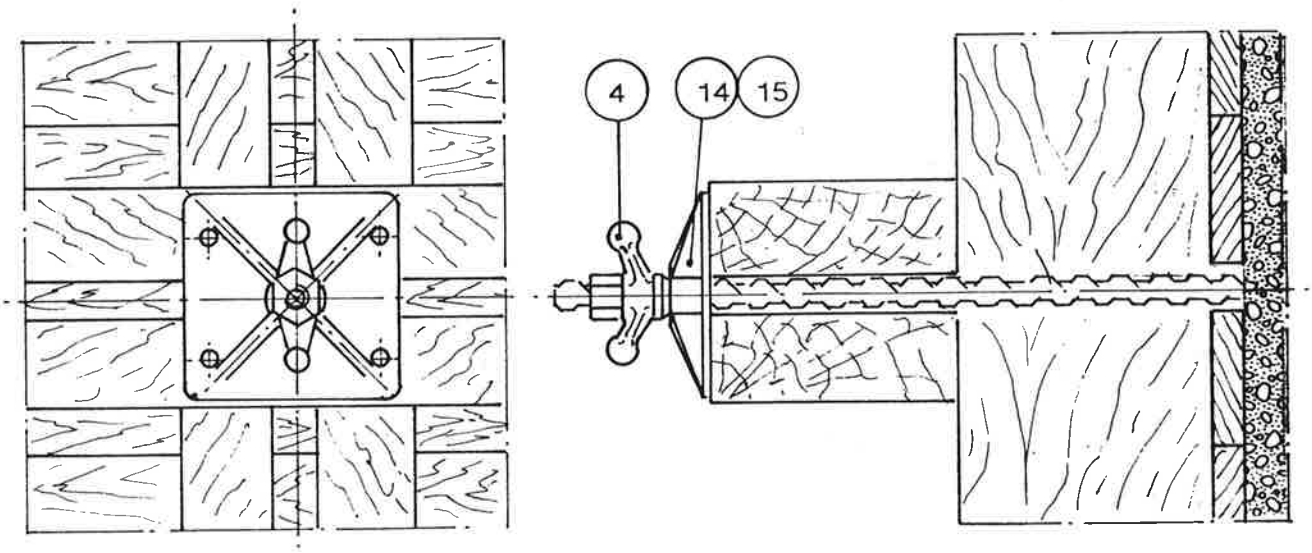

Depending on the load in the Tie, Thrust Plates 14 or 15 should be used together with the Nut, Item 4. For a bearing stress of 2.8 N/mm^2, the Thrust Plates can cater for the following loads if gap between timbers does not exceed 25 mm.

Thrust Plate 14 (140 x 140)	up to 45.1 kN
Thrust Plate 15 (150 x 200)	up to 70.0 kN

Property of (S.G.B. Group Limited Mitcham Surrey). Reproduction or disclosure to third parties, in any form whatsoever, not permitted without written consent.
Eigentum der (S.G.B. Group Limited Mitcham Surrey). Vervielfältigung oder Bekanntgabe an Dritte, in welcher Form auch, ist nicht gestattet.
Propriété de la (S.G.B. Group Limited Mitcham Surrey). La reproduction ou la communication à des tiers sous quelque forme que ce soit, est interdite sans l'autorisation écrite de la
Eigendom van (S.G.B. Group Limited Mitcham Surrey). Verveelvoudiging of bekendmaking aan derden in welke vorm dan ook is zonder voorafgaande schriftelijke toestemming van

S G B CIRCULAR FORMWORK SYSTEM

	INDEX TO DATA SHEETS	Pages
SECTION 1	INTRODUCTION TO THE SYSTEM	01 - 07 incl.
SECTION 2	GUIDANCE NOTES FOR DESIGNERS	08 - 16 incl.
SECTION 3	DESIGN CONSIDERATIONS	17 - 21 incl.
SECTION 4	EXPLANATORY DETAILS	22 - 35 incl.
SECTION 5	ON SITE GUIDANCE	36 - 38 incl.
SECTION 6	CURVING THE FORMS	39 - 42 incl.
SECTION 7	FORM UNITS WITH J29 MK II SOLDIERS	43 - 46 incl.

SECTION 1

INTRODUCTION TO THE SYSTEM

Special Components, code numbers, etc.

Schedules of nuts and bolts (ancillary components).

Copyright owned by S.G.B. Group Limited, Mitcham, Surrey. Copyright in bezit van S.G.B. Group Limited, Mitcham, Surrey. Copyright est la propriété de S.G.B. Group Limited, Mitcham, Surrey. Copyright ist Eigentum der S.G.B. Limited, Mitcham, Surrey.

SGB GROUP LIMITED

SGB CIRCULAR FORMWORK SYSTEM.
INTRODUCTION TO THE SYSTEM.

WILLOW LANE
MITCHAM
SURREY
Tel 01 648 3400

Ref No. J19
Page No. 02
Date Nov. 1979

INTRODUCTORY NOTES.

1. The System allows the fast and accurate bending of plywood sheets into circular forms with infinite variability of radii from around 5.0m radius upwards.

2. The System is based on the SGB J4 Soldier unit and its ancillary components. The only additional components required are the turnbuckles, edge angles, stiffening braces and appropriate nuts and bolts for fixing.

   See this page for detailed reference to these components.

3. The system is designed to be used with Finnish birch faced plywood in 18, 21 and 24mm nominal thickness sheets.

4. There is a special 1.2m high unit for bund walls, parapets, etc. See Sheet 28 for details.

DIAGRAMS

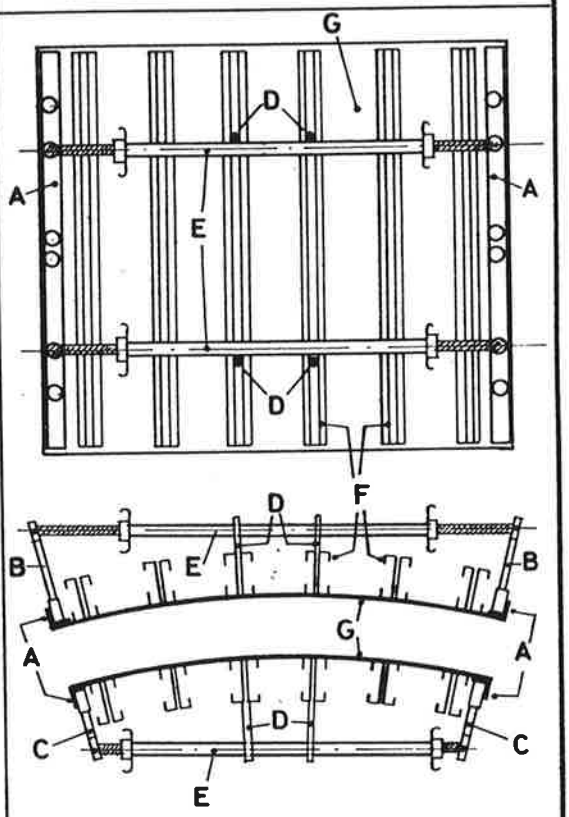

MEMBER	DESCRIPTION	FUNCTION
A	80 x 80 x 10 Angle Code Nos. 4440/01, 02, 03 and 04. Data Sheet 03	The member that directly bends the plywood by applying the necessary moment to the ends of the ply.
B	Outer Shutter Fork Arm Code No: 4440/05. Data Sheet 04	Permits connection of turnbuckle to angle, thus converting the turnbuckle force into the required end moment.
C	Inner Shutter Fork Arm Code No. 4440/06. Data Sheet 04	As 'B' above, but for the inner form.
D	Stiffening Braces Code No. 4440/07. Data Sheet 04	Used after main curving procedure to stiffen the unit and 'lock' the curve.
E	Turnbuckles Code No. 4440/09 and 10. Data Sheet 05	By extending or shortening the threads, these provide the force which induces the moment into the edge angle.
F	J4 Soldiers See Data Sheet Section J4.	These are the primary members that resist the forces imparted by the concrete pressures.
G	Plywood See Data Sheet 11	Provides the mould for the required concrete shape.

Copyright in bezit van S.G.B. Group Limited, Mitcham, Surrey. Copyright est la propriété de S.G.B. Group Limited, Mitcham, Surrey. Copyright ist Eigentum der S.G.B. Limited, Mitcham, Surrey. Copyright owned by S.G.B. Group Limited, Mitcham, Surrey.

WILLOW LANE
MITCHAM
SURREY
Tel·01·648·3400

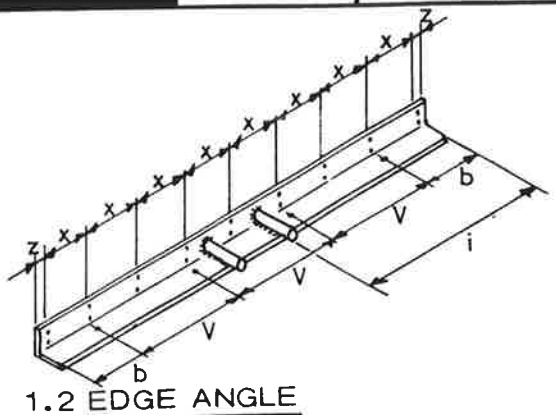

1.2 EDGE ANGLE

Code No:4440/04.
Weight: 16 Kgs.

3.6 EDGE ANGLE

Code No: 4440/01.
Weight: 47 Kgs.

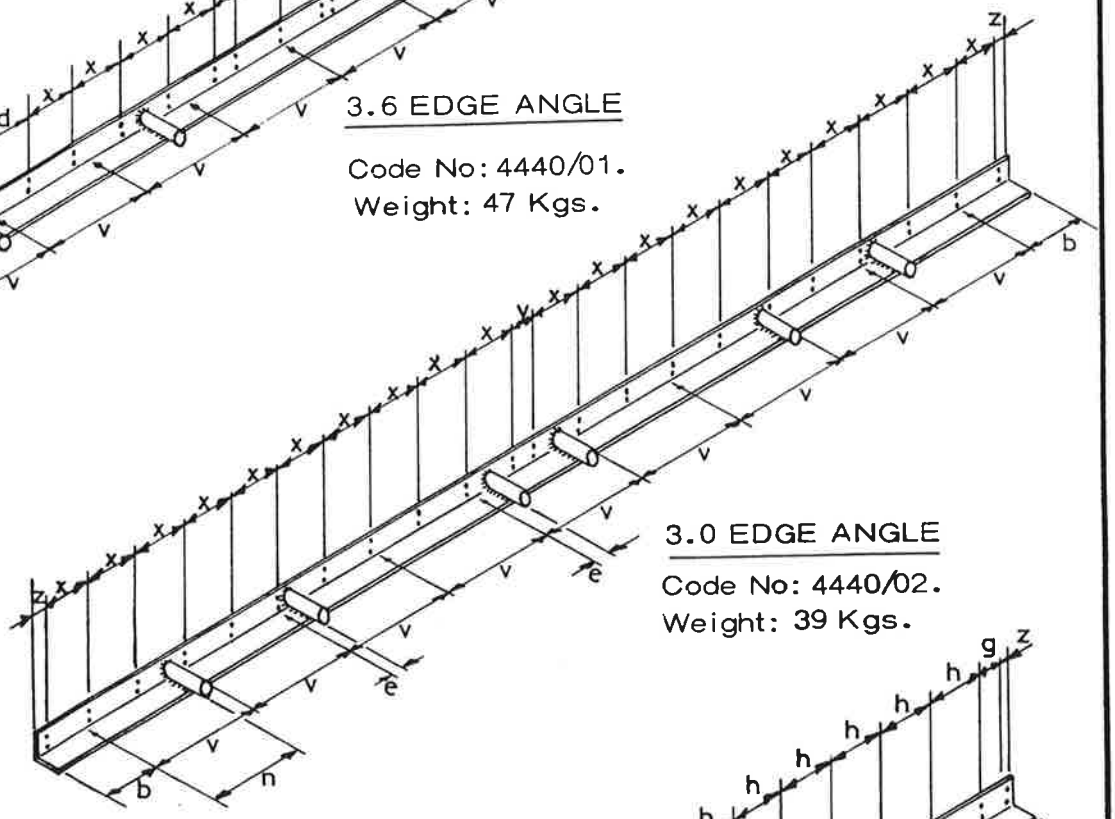

3.0 EDGE ANGLE

Code No: 4440/02.
Weight: 39 Kgs.

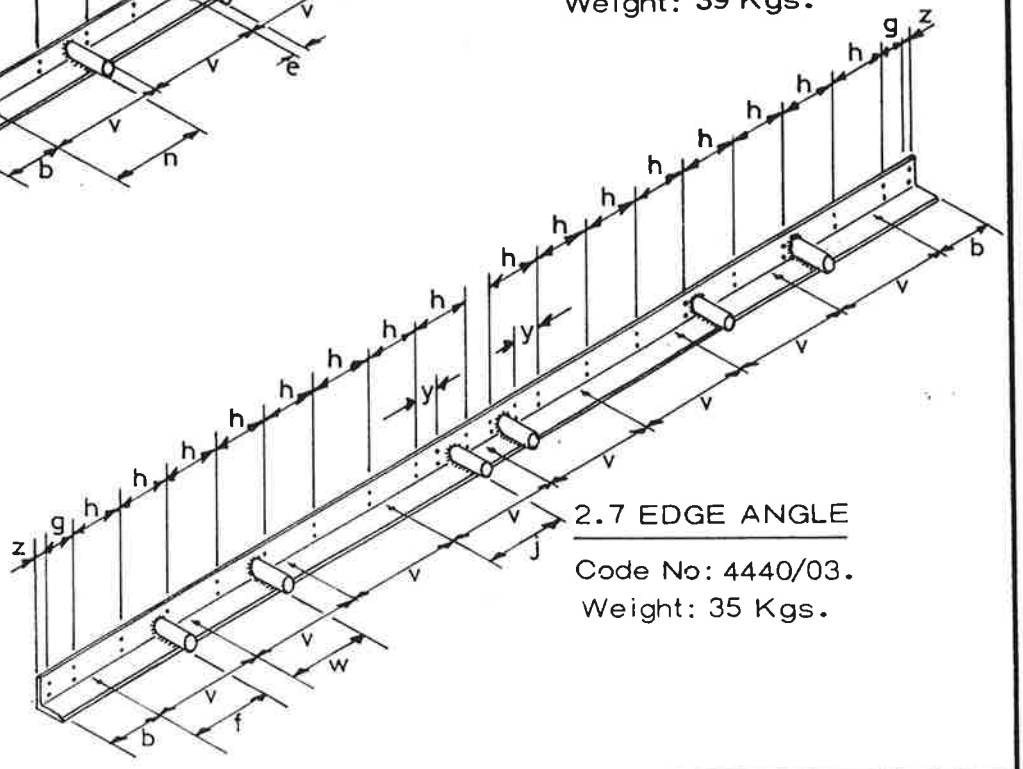

2.7 EDGE ANGLE

Code No: 4440/03.
Weight: 35 Kgs.

KEY

a = 125
b = 150
c = 30
d = 140
e = 55
f = 215
g = 80
h = 152·5
i = 520
j = 223

m = 193
n = 245

v = 300
w = 220
x = 145
y = 60
z = 20

ALL DIMS IN mm

Copyright in bezit van S.G.B. Group Limited, Mitcham, Surrey. Copyright est la propriété de S.G.B. Group Limited, Mitcham, Surrey. Copyright ist Eigentum der S.G.B. Limited, Mitcham, Surrey. Copyright owned by S.G.B. Group Limited, Mitcham, Surrey.

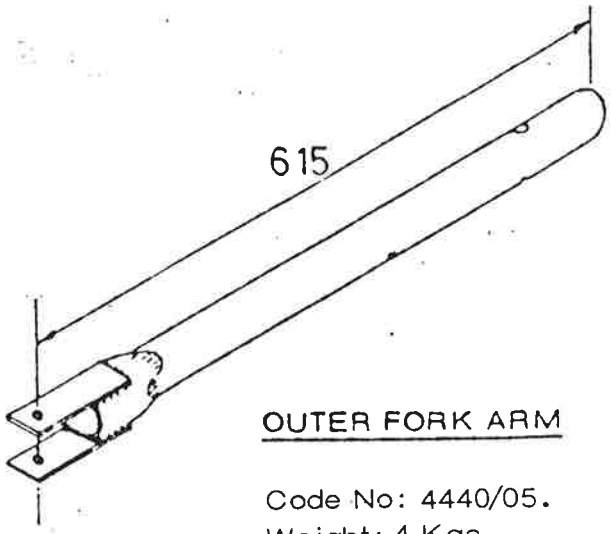

OUTER FORK ARM

Code No: 4440/05.
Weight: 4 Kgs.

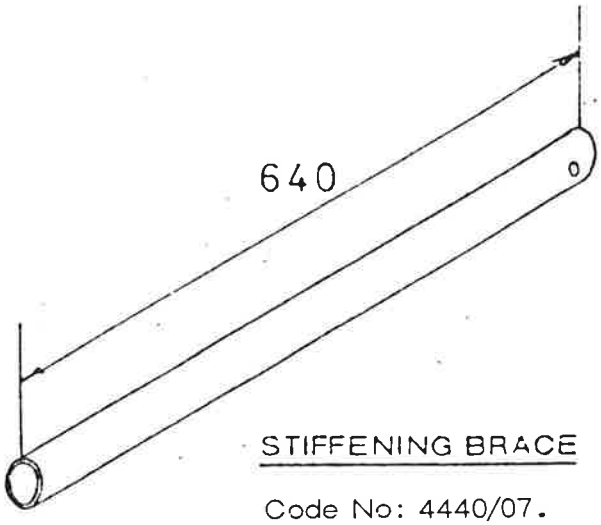

STIFFENING BRACE

Code No: 4440/07.
Weight: 2.8 Kgs.

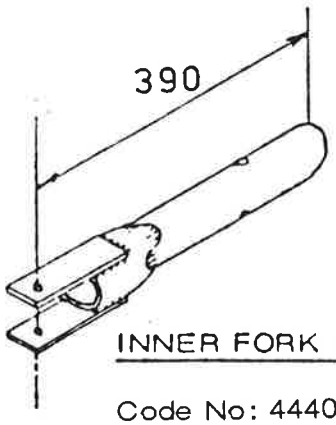

INNER FORK ARM

Code No: 4440/06.
Weight: 2 Kgs.

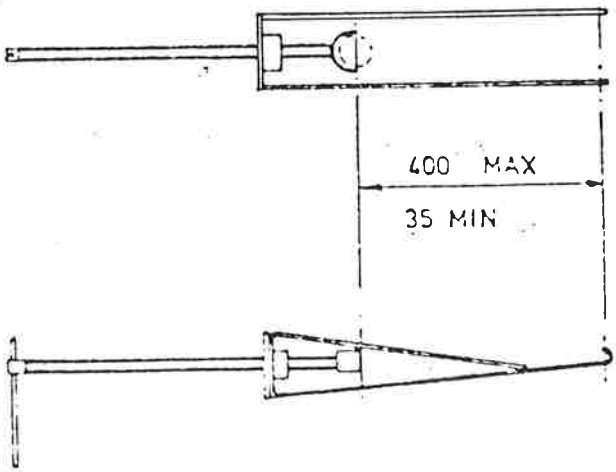

PULLING TOOL.

Code No: 4440/08.
Weight: 2.3 Kgs.

© Copyright S G B Group Limited 19

SGB GROUP LIMITED
WILLOW LANE MITCHAM
SURREY Tel. 01-648 3400

SGB CIRCULAR FORMWORK SYSTEM
SPECIAL COMPONENTS

Ref No. J19
Page No. 5
Date: June 1981

GROUP RESEARCH AND DEVELOPMENT DIVISION

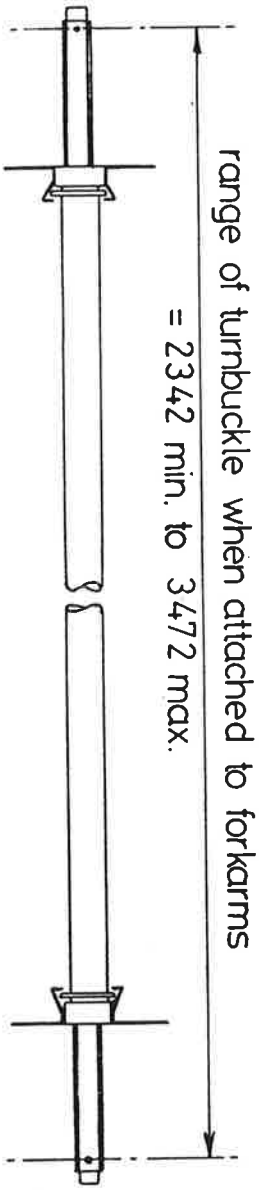

STANDARD TURNBUCKLE.

Code No: 4440/09.
Weight: 18 Kgs.

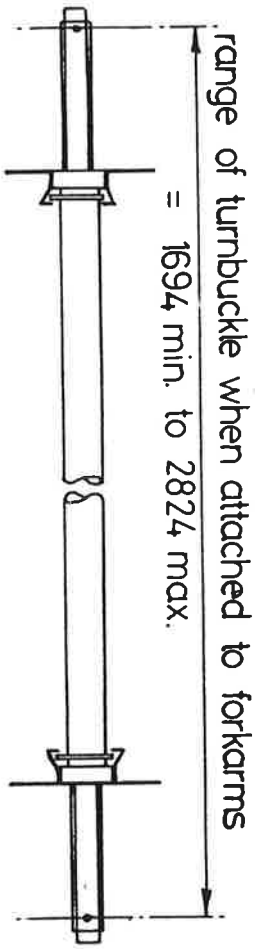

SHORT TURNBUCKLE.

Code No: 4440/10.
Weight: 10 Kgs.

ISSUED BY SGB GROUP RESEARCH AND DEVELOPMENT DIVISION - MITCHAM, ENGLAND.

Copyright in bezit van S.G.B. Group Limited, Mitcham, Surrey. Vermenigvuldiging of mededeling aan derden in welke vorm dan ook, is zonder schriftelijke toestemming van eigenares niet geoorloofd.

Copyright est la propriété de S.G.B. Group Limited, Mitcham, Surrey. La reproduction ou la communication à des tiers, sous quelque forme que ce soit n'est permise qu'avec l'autorisation écrite du propriétaire.

Copyright ist Eigentum der S.G.B. Limited, Mitcham, Surrey. Vervielfältigung oder Bekanntgabe an Dritte, in welcher Form auch, ohne schriftliche Genehmigung der Eigentumerin nicht gestattet.

Copyright owned by S.G.B. Group Limited, Mitcham, Surrey. Reproduction or disclosure to third parties in any form whatsoever is not allowed without the written consent of the proprietors. © Copyright S.G.B. Group Limited 19

WILLOW LANE
MITCHAM
SURREY
Tel 01 648 3400

SCHEDULE OF NUTS AND BOLTS.

1.2 HIGH FORM

DESCRIPTION	USED FOR:-	NUMBER REQUIRED
M10 x 60 90° countersunk square hexagon (bolt & nut)	Fixing continuous timber batten to soldier.	2 per soldier
M10 x 40 90° countersunk square hexagon (screw & nut)	Fixing edge angles to plywood.	9 per angle
M16 x 35 hexagon round hexagon (bolt and nut)	Joining two shutter units together.	5 per shutter joint
M10 x 70 Hexagon round hexagon (bolt and nut)	Fixing fork arms into spigots of edge angle	1 per fork arm
M10 x 70 Hexagon round hexagon (bolt and nut)	Fixing turnbuckles to fork arms.	2 per turnbuckle
M16 x 75 Hexagon round hexagon (bolt and nut)	Fixing stiffening braces to soldiers	1 per stiffening brace.

2.7 HIGH FORM

DESCRIPTION	USED FOR:-	NUMBER REQUIRED
M10 x 60 90° countersunk square hexagon (bolt & nut)	Fixing continuous timber batten to soldier.	4 per soldier
M10 x 40 90° countersunk square hexagon (screw & nut)	Fixing edge angles to plywood.	22 per angle
M16 x 35 Hexagon round hexagon (bolt and nut)	Joining two shutter units together.	11 per shutter joint
M10 x 70 Hexagon round hexagon (bolt and nut)	fixing fork arms into spigots of edge angle.	1 per fork arm
M10 x 70 Hexagon round hexagon (bolt and nut)	Fixing turnbuckles to fork arms.	2 per turnbuckle
M16 x 75 Hexagon round hexagon (bolt and nut)	Fixing stiffening braces to soldiers.	1 per stiffening brace

ISSUED BY SGB GROUP RESEARCH AND DEVELOPMENT DIVISION - MITCHAM, ENGLAND.

Copyright in bezit van S.G.B. Group Limited, Mitcham, Surrey. Copyright est la propriété de S.G.B. Group Limited, Mitcham, Surrey. Copyright ist Eigentum der S.G.B. Limited, Mitcham, Surrey. Copyright owned by S.G.B. Group Limited, Mitcham, Surrey. © Copyright S.G.B. Group Limited 19

WILLOW LANE
MITCHAM
SURREY
Tel 01 648 3400

SCHEDULE OF NUTS AND BOLTS.

3·0 HIGH FORM

DESCRIPTION	USED FOR:-	NUMBER REQUIRED
M10 x 60 90° countersunk square hexagon (bolt & nut)	Fixing continuous timber batten to soldier.	4 per soldier
M10 x 40 90° countersunk square hexagon (screw & nut)	Fixing edge angles to plywood.	22 per angle
M16 x 35 Hexagon round hexagon (bolt and nut)	Joining two shutter units together.	11 per shutter joint
M10 x 70 Hexagon round hexagon (bolt and nut)	Fixing fork arms into spigots of edge angle.	1 per fork arm
M10 x 70 Hexagon round hexagon (bolt and nut)	Fixing turnbuckles to fork arms.	2 per turnbuckle
M16 x 75 Hexagon round hexagon (bolt and nut)	Fixing stiffening braces to soldiers.	1 per stiffening brace

3·6 HIGH FORM

DESCRIPTION	USED FOR:-	NUMBER REQUIRED
M10 x 60 90° countersunk square hexagon (bolt & nut)	Fixing continuous timber batten to soldier.	6 per soldier
M10 x 40 90° countersunk square hexagon (screw & nut)	Fixing edge angles to plywood.	29 per angle
M16 x 35 Hexagon round hexagon (bolt and nut)	Joining two shutter units together.	12 per shutter joint
M10 x 70 Hexagon round hexagon (bolt and nut)	Fixing fork arms into spigots of edge angle.	1 per fork arm
M10 x 70 Hexagon round hexagon (bolt and nut)	Fixing turnbuckles to fork arms.	2 per turnbuckle
M16 x 75 Hexagon round hexagon (bolt and nut)	Fixing stiffening braces to soldiers.	1 per stiffening brace

ISSUED BY SGB GROUP RESEARCH AND DEVELOPMENT DIVISION - MITCHAM, ENGLAND.

Copyright owned by S.G.B. Group Limited, Mitcham, Surrey. Copyright is the property of S.G.B. Group Limited, Mitcham, Surrey. Copyright est la propriété de S.G.B. Group Limited, Mitcham, Surrey. Copyright ist Eigentum der S.G.B. Limited, Mitcham, Surrey.
© Copyright S.G.B. Group Limited

SECTION 2

GUIDANCE NOTES FOR DESIGNERS

Use of the system, preparing a scheme, working drawings, etc.

Worked example for a circular tank using the system.

Choice of turnbuckles (standard or short), number and position, etc.

Copyright owned by S.G.B. Group Limited, Mitcham, Surrey. Reproduction or disclosure to third parties in any form whatso... not ... d with ... nsent ... proprie... c Co... t S G ... up Lim... 9

Copyright ist Eigentum der S.G.B. Limited, Mitcham, Surrey. Vervielfältigung oder Bekanntgabe an Dritte, in welcher Form ... ohne ... lich ... migun... Eigen... in nich... g... lt.

Copyright est la propriété de S.G.B. Group Limited, Mitcham, Surrey. La reproduction ou la communication à des tiers sous quelq... me qu... oit n'e... ise ... ec l'aut... ion écrite ... opriété...

Copyright in bezit van S.G.B. Group Limited, Mitcham, Surrey. Vermenigvuldiging of mededeling aan derden in welke vorm ook, i... der s... lijke t... nming ... geoorl...

LAY-OUT AND DETAILING OF THE FORMWORK PANELS.

1. The following notes deal with the procedures necessary to set out the individual units that go together to make up the completed structure form, and are intended as a guide to the detailer or designer in the preparation of the working drawings.

2. An essential consideration in the planning of the setting out, number and size of forms is the intended method of construction of the structure.

3. For example, assume the intended structure is to be a circular tank. If it has a very large diameter it may be decided to pour the concrete wall in sequence, pouring say one or two segments at a time with stop end construction joints, continuing when these have set with the remaining sections of the wall in a similar sequence of pour. Obviously this method of construction would not necessarily require the total number of forms that would make up the entire circumference of the tank and it could be constructed with say a minimum of two (outer and inner) forms constituting a one segment pour sequence.

4. Alternatively, a smaller tank may be readily concreted in one operation and if this is the case obviously all the forms, comprising the inner and outer faces, will have to be available and placed in situ prior to the pour. These and other considerations of construction will need to be clarified prior to working drawing stage.

5. The method of construction, as described in paragraph 3 above, will usually only need standard form units whereas for the method described in paragraph 4 above, careful consideration will have to be given to special make-up units, in addition to the standard form units. The following headings are therefore directed to the latter method and explain the main items that must be considered when preparing a scheme for a circular structure requiring all the forms that make up the inner and outer circumference.

(A) Outer Shutter Face Forms.

Standard form units are shown on data sheet 11. The length is always 3050mm and by using combinations of the various ply panels available, different heights may be achieved as shown. These units will always be used in the outer face with the intention of using as many as possible (without cutting) to form the complete outer circumference of the structure. Obviously the circle will rarely be closed by an exact number of 3050 units and in nearly all cases one or more make-up units will have to be cut to close the circle exactly.

continued .....

Copyright in bezit van S.G.B. Group Limited, Mitcham, Surrey. Copyright est la propriété de S.G.B. Group Limited, Mitcham, Surrey. Copyright ist Eigentum der S.G.B. Limited, Mitcham, Surrey. Copyright owned by S.G.B. Group Limited, Mitcham, Surrey. © Copyright S.G.B. Group Limited 19

(B) Inner Shutter Face Forms.

The units that comprise this circumference will always be less than the standard 3050 length, so that when both forms are placed in situ complete co-ordination between the inner and outer units is obtained. A full explanation of this, together with a formula for calculating the inner form length, is given in data sheet number 38.

Here too special make-up unit(s) will nearly always be necessary, co-ordinating with the outer form make-up unit(s).

(C) Striking Pieces.

This is a detail that is required only once between two angles on the inner shutter forms. It is necessary to allow the striking of the inner ring of shutters after the concrete has set.

For full details of this item see Data Sheet 35.

(D) Soldier Centres.

Although there is a separate section devoted to the choice of soldier centres (Data Sheets 17 to20), it is worth noting here that the inner form soldier centres will vary from the outer soldier centres and there is an explanation of this, together with a formula for calculating the inner soldier centres, on Data Sheet 38.

(E) Turnbuckles.

There are two types of turnbuckle that complement the system, the standard and short turnbuckle. The length of the standard turnbuckle is designed to suit most form lengths over various radii, but there will of course be cases when a particular make-up form length will be out of the range of the standard turnbuckle, and in these cases the short turnbuckle must be used. The correct co-ordination between turnbuckle range, form length and required radius is therefore a most important factor in the design of the setting out.

With the above in mind, two graphs have been prepared to assist the designer in the setting out of the system and some examples follow to explain their use. It will be noted that the minimum size of make-up form length has been restricted to 1850 for outer forms, and 1900 for inner forms (see graphs Pages 13 & 14). This ensures that the short turbuckle can always be attached between fork arms. For Examples see page 12.

Having established a satisfactory setting out arrangement in accordance with the above, it only remains to determine the required soldier centres (See D above) and the number and position of the turnbuckles required for each form. For guidance on this see sheet 15 and 16.

Copyright owned by S.G.B. Group Limited, Mitcham, Surrey. Copyright S.G.B. Group Limited 19

MAX. PANEL SIZES AVAILABLE FOR THE OUTER SHUTTER FORM.

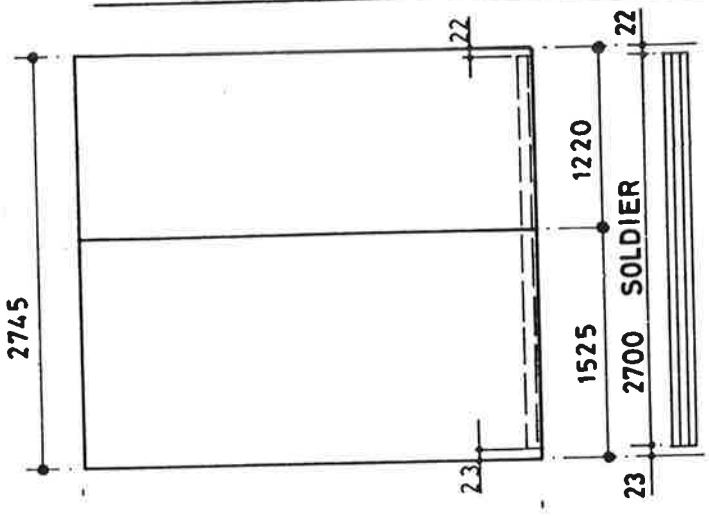

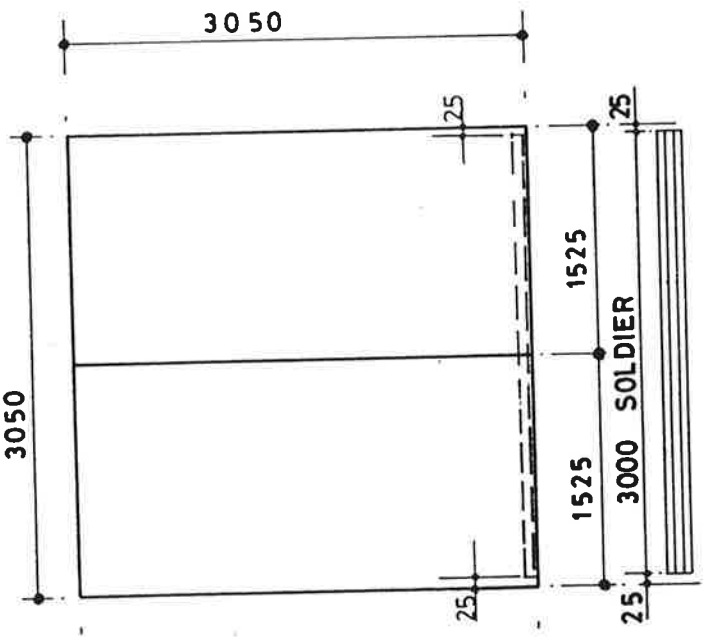

The plywood sheets, although not supplied by SGB, are a very important part of the system.

The type of plywood recommended is Finnish Birch plywood. There are two types suitable for formwork.

A. Finnish Birch Faced Plywood Exterior WPB.

B. All Finnish Birch Plywood Exterior WPB.

Type A is most commonly used for formwork.

Type A is a composition of birch hardwood face veneers, with the inner core comprising alternate layers of birch and softwood plies.

Type B is a composition of birch hardwood plies throughout the thickness of the sheet. The veneers are cross banded.

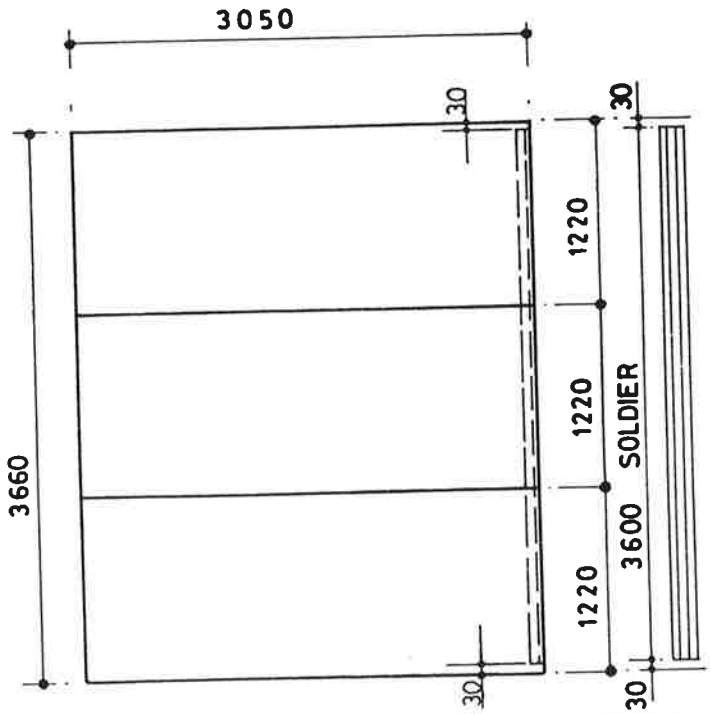

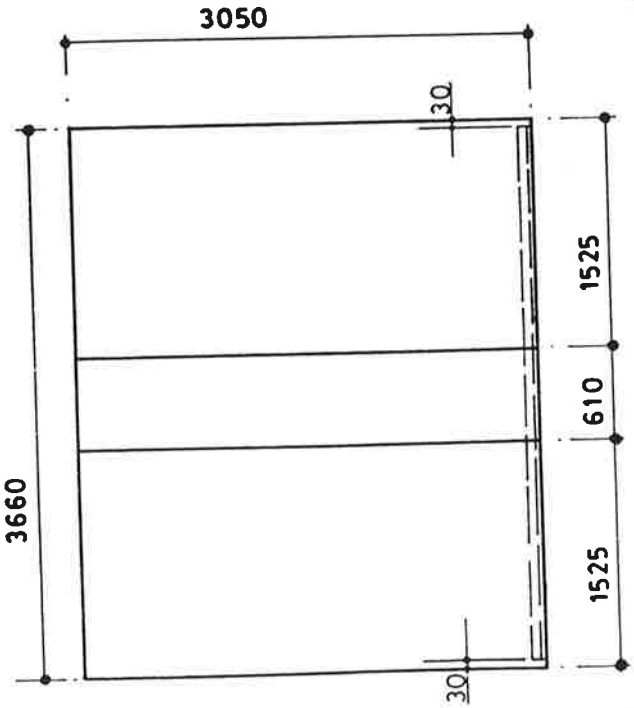

Copyright owned by S.G.B. Group Limited, Mitcham, Surrey. Reproduction or disclosure to third parties in any form whatsoever is not permitted without the written consent of the proprietors. © Copyright S.G.B. Group Limited 19

Copyright ist Eigentum der S.G.B. Limited, Mitcham, Surrey. Vervielfältigung der Beschreibung ... in welcher Form ... ohne ... Eigentümer ... in nicht ... gestattet.

Copyright est la propriété de S.G.B. Group Limited, Mitcham, Surrey. Reproduction ou la communication à des tiers sous quelque forme que soit n'est ... écrite ... propriétaire.

Copyright in bezit van S.G.B. Group Limited, Mitcham, Surrey. Vermenigvuldiging of mededeling aan derden in welke vorm ook, ... geoorloofd.

WILLOW LANE
MITCHAM
SURREY
Tel 01 648 3400

EXAMPLE 1.

It is proposed to develop a scheme for the shuttering of a circular tank. The outside diameter of the finished concrete is to be 13.8m and the internal diameter (with 300mm wall thickness) is to be 13.2m. The height of the tank wall above kicker level is 2.8m.

1. DETERMINE HEIGHT OF FORMS. :- REFER TO SHEET NO. 25.

THE HEIGHT OF THE FORM SUITABLE FOR THE WALL WILL BE 3050 MADE UP FROM THE TWO PLYWOOD PANEL SIZES SHOWN.

2. DETERMINE THE NUMBER OF STANDARD (3.05M) FORMS REQUIRED IN THE OUTER FACE AND MAKE-UP FORMS.

NOTE:- WHEN CALCULATING CIRCUMFERENCES OF PLYWOOD THE DIAMETERS USED IN THE CALCULATIONS SHOULD BE TAKEN FROM THE CENTRE LINE OF THE PLYWOOD THICKNESS.

∴ CIRCUMFERENCE OF OUTER FORM PLYWOOD (WHERE DIA. = 13.8 + 0.018) = 43.41 M.
∴ NUMBER OF 3.05 UNITS TO MAKE 43.41M = 43.41/3.05 = 14.23 No.
∴ SAY 14 WITH A MAKE-UP LENGTH OF 0.710M < 1.850 - MIN. FORM LENGTH:
∴ TRY 13 x 3.05 UNITS LEAVING 3.76M. MAKE-UP > 3.050 - MAX FORM LENGTH:
∴ SPLIT 3.76 INTO TWO MAK-UP UNITS = 1.880M EACH BUT THIS IS VERY NEAR TO THE MINIMUM SHEET LENGTH OF 1.850 AND IT IS LIKELY THE OPPOSITE INNER FORM WILL BE SHORTER THAN THIS MINIMUM.
∴ USE 12 x 3.05 FORMS LEAVING 6.810M. MAKE-UP IN 3 LENGTHS OF 2.270 M.

∴ FOR THE OUTER CIRCUMFERENCE FORMS USE:-
12 x 3.05 (STANDARD UNITS) AND 3 x 2.27 MAKE-UP UNITS. = 43.41 M.

3. DETERMINE THE LENGTH OF THE INNER FACE FORMS TO CO-ORDINATE WITH 2. ABOVE.

REFER TO SHEET 38.

LENGTH OF INNER FORMS TO MATCH OUTER 3.05 FORMS
$= 3050 - \frac{3050 \times (300 + 18)}{6900 + 18/2} = 2909.618$ mm. SAY 2910 mm. } x 12.

*LENGTH OF INNER FORMS TO MATCH OUTER 2.27 FORMS
$= 2270 - \frac{2270 \times 318}{6909} = 2165.5$ mm. - CHECK THIS WITH

CIRCUMFERENCE OF INNER FORM PLYWOOD (WHERE DIA. = 13.2 - 0.018) = 41.412M.

*LENGTH OF INNER MAKE-UP FORMS (ALTERNATIVE METHOD).
$= [41.412 - (12 \times 2.91)] 1/3 = 2.164$ M.

∴ FOR THE INNER CIRCUMFERENCE FORMS USE:-
12 x 2.91 M. LONG FORMS + 3 x 2.164 M. LONG FORMS = 41.412 M.
BUT NOTE THAT ALLOWANCE MUST BE MADE FOR THE STRIKING PIECE SAY IN 2 OF THE 3 - 2.164 LONG FORMS.

4. DETERMINE TYPE OF TURNBUCKLE FOR OUTER FORMS.

REFER TO SHEET 13 : PLOT THE MAKE-UP FORM LENGTH OF 2.27M ACROSS TO THE RADIUS LINE OF 6.9M. THE PLOTTED POINT FALLS BELOW LINE B, B2 INDICATING THAT ONLY THE SHORT TURNBUCKLE CAN BE USED:

5. DETERMINE TYPE OF TURNBUCKLE FOR INNER FORMS.

REFER TO SHEET 14 : a) 2.910 FORMS :- PLOT THIS LENGTH ACROSS TO THE RADIUS LINE OF 6.6M. THE POINT FALLS WITHIN THE SHADED AREA INDICATING THAT EITHER THE STANDARD OR SHORT TURNBUCKLE CAN BE USED.

b). 2.164 FORMS :- PLOT SIMILARLY AS FOR a): THE GRAPH INDICATES THAT ONLY THE SHORT TURNBUCKLE CAN BE USED.

CONSIDERATION CAN NOW BE GIVEN TO THE SOLDIER CENTRES, NUMBER AND POSITION OF TURNBUCKLES:
FOR GUIDANCE ON THE FORMER SEE SHEETS 17, 18, 19, 20.
FOR GUIDANCE ON THE LATTER SEE SHEETS 15 AND 16.

Copyright in bezit van S.G.B. Group Limited, Mitcham, Surrey. Copyright est la propriété de S.G.B. Group Limited, Mitcham, Surrey. Copyright ist Eigentum der S.G.B. Limited, Mitcham, Surrey. Copyright S.G.B. Group Limited 19 © Copyright S.G.B. Group Limited 19

SGB GROUP LIMITED
WILLOW LANE
MITCHAM
SURREY
Tel 01 648 3400

SGB CIRCULAR FORMWORK SYSTEM.
OUTER FORMS.

GRAPH FOR OUTER FORM UNITS.

Standard Form Length

For explanation on use refer to Data Sheets 10 and 12

NOTE: FOR PLOTS ON OR NEAR THIS LINE USE STANDARD TURNBUCKLE ONLY:

NOTE: FOR PLOTS ON OR NEAR THIS LINE USE SHORT TURNBUCKLE ONLY:

Min Form Length Possible With Standard Length Turnbuckle:

STANDARD T.B. ONLY.

SHORT OR STANDARD T.B.

SHORT T.B. ONLY.

Points plotted to the right of line A1 A2 denote only the standard length turnbuckle can be used:

Points plotted within the shaded area denote that either the short or standard length turnbuckle may be used:

points plotted within the area A3 A4 B1 B2 denote only the short turnbuckle can be used:

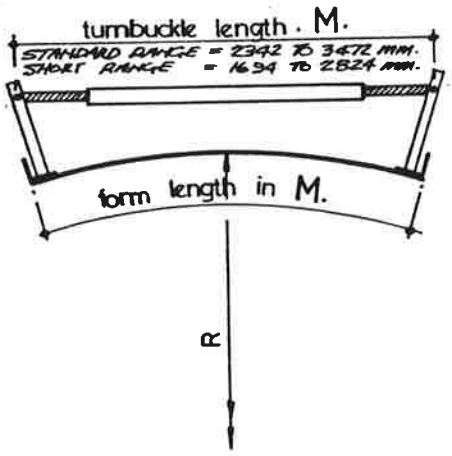

Radii: FLAT, 40.0, 20.0, 9.0, 8.0, 7.0, 6.0, 5.0

form length in M.: 3.05, 3.0, 2.9, 2.8, 2.7, 2.6, 2.5, 2.48, 2.4, 2.3, 2.2, 2.1, 2.0, 1.9, 1.85, 1.83

turnbuckle length. M. Approximate only: 1.840, 1.930, 2.020, 2.110, 2.200, 2.290, 2.380, 2.470, 2.560, 2.649, 2.738, 2.830, 2.920, 3.000, 3.100, 3.188, 3.278, 3368

Copyright owned by S.G.B. Group Limited, Mitcham, Surrey. Reproduction or disclosure to third parties in any form whatsoever is not permitted without the written consent of S.G.B. Group Limited.
Copyright ist Eigentum der S.G.B. Limited, Mitcham, Surrey. Vervielfältigung oder Bekanntgabe an Dritte, in welcher Form ohne ausdrückliche schriftliche Genehmigung der S.G.B. Group Limited, Mitcham, Surrey, ist nicht gestattet.
Copyright est la propriété de S.G.B. Group Limited, Mitcham, Surrey. La reproduction ou la communication à des tiers, sous quelque forme que ce soit n'est pas autorisée sans l'autorisation écrite préalable de S.G.B. Group Limited, Mitcham, Surrey.

SGB GROUP LIMITED
WILLOW LANE
MITCHAM
SURREY
Tel 01 648 3400

SGB CIRCULAR FORMWORK SYSTEM.
INNER FORMS.

Ref No. ...J.19....
Page No. 14....
Date FEB 1981

GRAPH FOR INNER FORM UNITS.

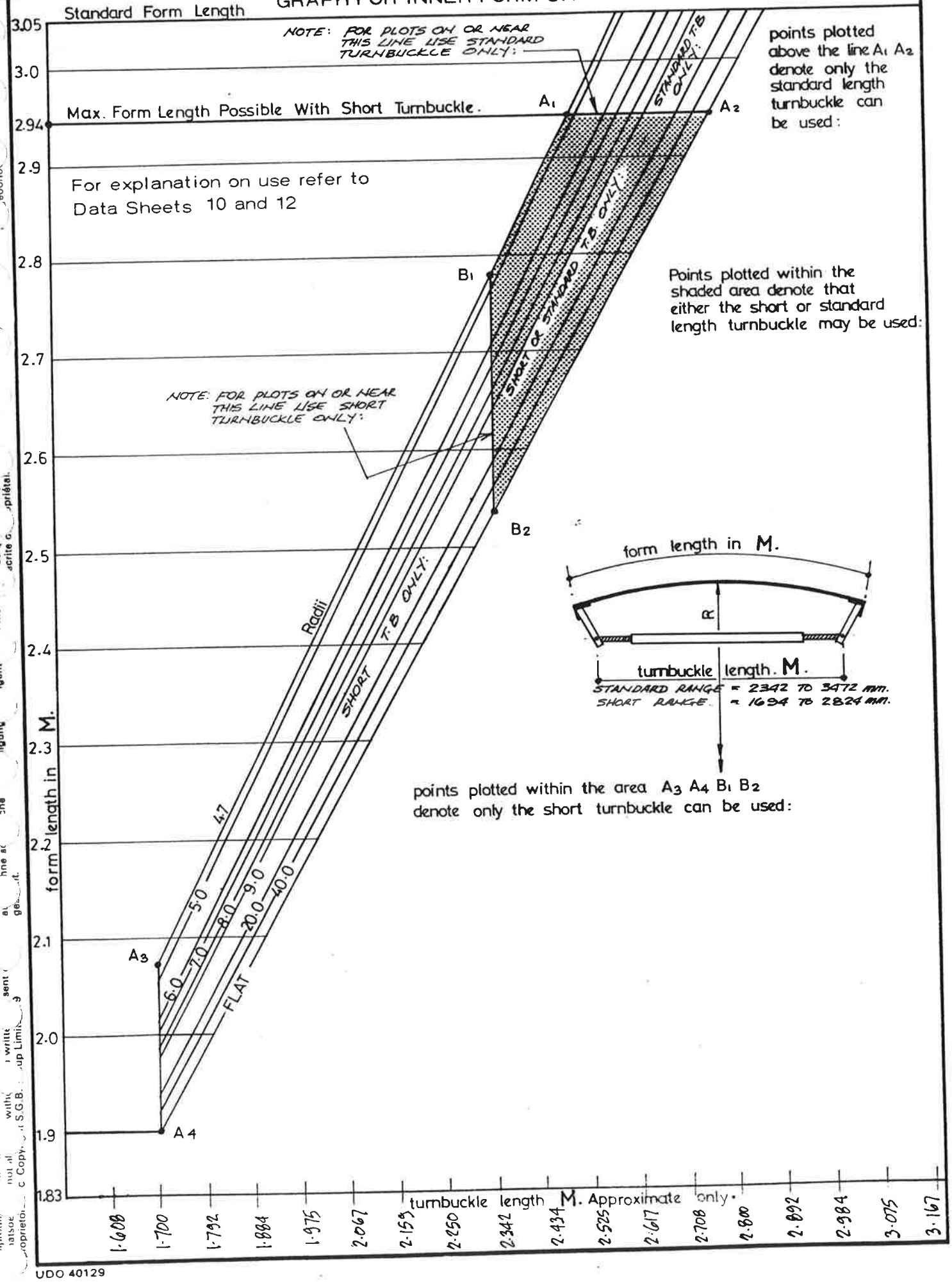

Copyright owned by S.G.B. Group Limited, Mitcham, Surrey

UDO 40129

GUIDANCE NOTES ON THE NUMBER AND POSITION OF TURNBUCKLES REQUIRED FOR INNER AND OUTER FORMS.

Each edge angle is supplied with 6 spigots, see Sheet 02, members 'A'. This is to permit two combinations of turnbuckle arrangement, as shown in diagrams 1 and 2 under.

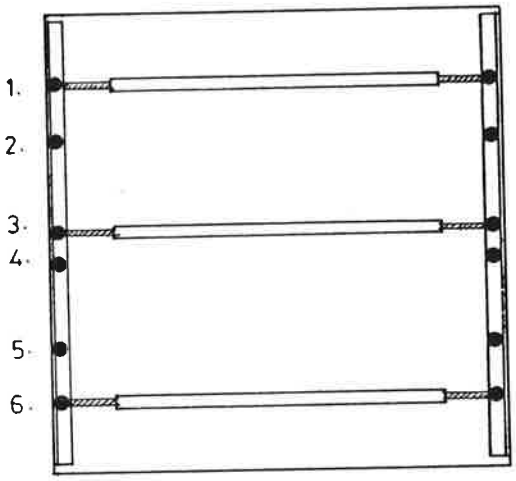

DIAG. 1

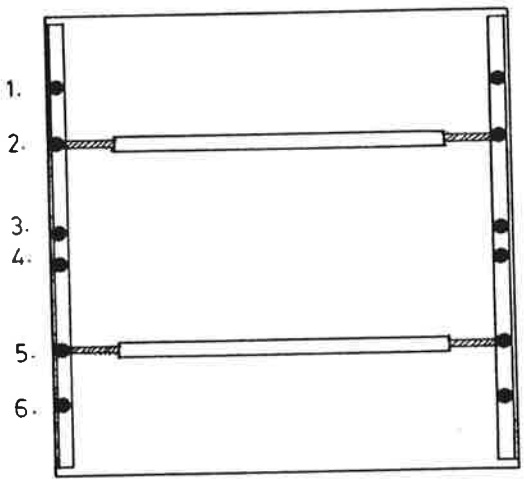

DIAG. 2

Note that for a three turnbuckle arrangement spigots 1, 3 or 4 and 6 are used, and for a two turnbuckle arrangement spigots 2 and 5 are used. This facility, to choose the position and number of turnbuckles, is designed to cater for the difference in forces set up when bending the plywood to large radii and small radii.

The latter requires large forces and the former quite low forces. Therefore to limit the deflection of the edge angle on small radii it will be necessary to employ three turnbuckles in the positions shown.

The table on page 16 is intended as a guide in choosing the arrangement, but it must be noted that due to the variations in flexural stiffness of plywood it may prove necessary in some cases to increase the number from two turnbuckles where noted, to three.

Copyright in bezit van S.G.B. Group Limited, Mitcham, Surrey. Copyright est la propriété de S.G.B. Group Limited, Mitcham, Surrey. Copyright ist Eigentum der S.G.B. Limited, Mitcham, Surrey. Copyright owned by S.G.B. Group Limited, Mitcham, Surrey. © Copyright S.G.B. Group Limited 19

	OUTSIDE FORMS.		
FORM HEIGHT	RADIUS	NO: OF TURNBUCKLES	SPIGOT POSITION
3.6	> 8.0m	2	2, 5
3.6	⩽ 8.0m	3	1, 3 or 4, 6
3.0	> 7.0m	2	2, 5
3.0	⩽ 7.0m	3	1, 3 or 4, 6
2.7	> 6.5m	2	2, 5
2.7	⩽ 6.5m	3	1, 3 or 4, 6

	INSIDE FORMS		
FORM HEIGHT	RADIUS	NO: OF TURNBUCKLES	SPIGOT POSITION
3.6	> 8.0m	2	2, 5
3.6	⩽ 8.0m	3	1, 3 or 4, 6
3.0	> 5.0m	2	2, 5
3.0	⩽ 5.0m	3	1, 3 or 4, 6
2.7	> 5.0m	2	2, 5
2.7	⩽ 5.0m	3	1, 3 or 4, 6

THE ABOVE TABLES ARE INTENDED AS A GUIDE IN DETERMINING THE NUMBER AND POSITION OF TURNBUCKLES REQUIRED FOR THE FORM UNITS.

ISSUED BY SGB GROUP RESEARCH AND DEVELOPMENT DIVISION - MITCHAM, ENGLAND.

UDO 40129

Copyright in bezit van S.G.B. Group Limited, Mitcham, Surrey. Copyright est la propriété de S.G.B. Group Limited, Mitcham, Surrey. Copyright ist Eigentum der S.G.B. Limited Mitcham Surrey. Copyright S.G.B. Group Limited 19

SECTION 3

DESIGN CONSIDERATIONS

Concrete pressure, deflection, radius of curvature.

Tables 1 and 2 to assist designer in choice of plywood thickness related to pressure, deflection, soldier centres and limiting radii.

This section also gives some information on plywood stresses.

Copyright owned by S.G.B. Group Limited, Mitcham, Surrey. Copyright est la propriété de S.G.B. Group Limited, Mitcham, Surrey. Copyright ist Eigentum der S.G.B. Limited, Mitcham, Surrey.

The following section is intended to give some informative guidance on the choice of plywood thickness and, coupled with this, the soldier centres.

There are three items that must be considered when choosing these important factors.

1. Concrete pressure.
2. Deflection.
3. Radius of the structure.

All these factors are interlinked and no one factor can be considered individually without having considered the remaining two.

1. CONCRETE PRESSURE.

The determination of the actual maximum loads placed upon formwork during and after the pouring of the concrete is to some extent a matter of conjecture.

The reader is referred to the following publications, which explain two methods currently used in the U.K. to determine pressure.

a) CERA — Research Report No. 1.

b) CIRIA — Concrete Pressure on Formwork - Data Sheet (Revised 1979)

It is reasonable to say that for most normal types of wall structures maximum pressures of around 50 kN/m^2 can be expected, but of course the designer will have to verify this with calculations applicable to the particular structure being considered.

2. DEFLECTION.

The deflection of both the plywood and the J4 Soldiers must now be considered.

Full guidance on determining likely deflections in the soldiers, and in conjunction with this consideration of the loads on the tie rods, is given in the SGB J4 section Data Sheets, pages 14, 15 and 16.

Copyright owned by S.G.B. Group Limited, Mitcham, Surrey. Copyright ist Eigentum der S.G.B. Limited, Mitchem, Surrey. Copyright est la propriété de S.G.B. Group Limited, Mitcham, Surrey.

The deflection of the plywood however is not so easily determined, and certainly not with any great accuracy it would seem, if calculated deflections are compared with measured test deflections.

Table 1*, therefore, lists actual measured deflections (for the three thicknesses of plywood most suited to the system) obtained from a testing programme carried out in the SGB Research and Development Department.

The Table is self-explanatory and the designer may decide for himself if the deflection for any particular combination of plywood thickness and soldier centre is acceptable or not.

3. RADIUS OF THE STRUCTURE.

Notwithstanding the above considerations, the radius of the structure will have a direct influence on what thickness of plywood can be used.

Obviously the smaller the radius of the structure, the more flexible the plywood needs to be. All three thicknesses of plywood have a limiting radius, which is dependent on their respective flexibility.

Table 2 shows these limiting radii for the three thicknesses of plywood, together with the calculated stress on the plywood induced by bending to the curve.

Particular attention must be given to the notes accompanying both Table 1 and Table 2.

*Table 1 contains information on the deflection of the plywood with the soldiers spaced at either 508mm centres or 436mm centres - nominal.

These two centres allow 6 or 7 soldiers respectively to be equally spaced along a standard 3050 (10'0") sheet of plywood. 500mm and 428mm centres are applicable if plywood sheets to metric standards of 3000mm long are used.

Tests have been carried out showing the suitability of these centres with respect to plywood deflections, and the results thus obtained are shown in Table 1.

The designer should choose from either of these two nominal centres, depending on the plywood to be used, the concrete pressures involved and the radius of curvature required for the particular job.

Copyright owned by S.G.B. Group Limited, Mitcham, Surrey. Copyright est la propriété de S.G.B. Group Limited, Mitcham, Surrey. Copyright Ist Eigentum der S.G.B. Limited, Mitcham, Surrey. Copyright in bezit van S.G.B. Group Limited, Mitcham, Surrey.

The deflections for 18, 21 and 24mm thick Finnish birch faced plywood, spanning J4 Soldiers with an imposed pressure of 50 kN/m^2, are shown in Table 1.

TABLE 1.

Plywood thickness / Radius	508mm Nominal soldier centres. Deflection in mm.	508mm Nominal soldier centres. Calculated Factor/Safety	436mm Nominal Soldier Centres. Deflection in mm	436mm Nominal Soldier Centres. Calculated Factor/Safety	REMARKS
18mm / 5.0 M	3.35mm	1.85	1.4mm	2.22	Moisture content of ply approx. 29%.
		1.48		1.81	
21mm / 8.7 M	2.4mm	2.18	1.12mm	3.13	Face grain parallel with soldiers.
		1.74		2.62	
24mm / 13.0 M	1.13mm	2.72	0.55mm	3.27	U.D.L.
		2.18		2.67	Face measured

NOTES:

The information contained in this Table is for guidance only.

The deflections tabulated were obtained by direct measurement of Finnish birch faced plywood specimens in a small pressure testing apparatus, which used J4 Soldiers at the nominal centres stated. The deflections quoted are the maximum obtained from two middle spans considered.

The Factors of Safety tabulated are based (by calculation) on the ultimate stress characteristics for each thickness of plywood. The upper line is for continuous middle spans and the lower line is for end spans where a stop end might be used thus interrupting continuity.

Due to the variability of the 'E' of plywood and for the reasons noted under Table 2, the information shown in Table 1 should not be regarded as "worst case" conditions.

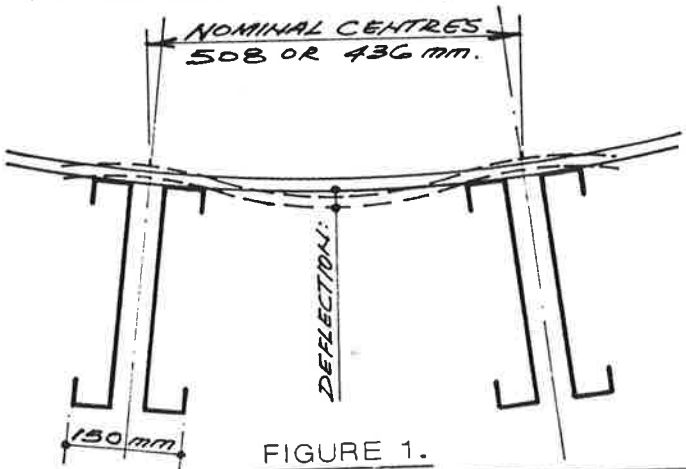

FIGURE 1.

The meaning of 'deflection', used in Table 1 and where mentioned in these Data Sheets for plywood, is clearly defined in Figure 1.

Where the plywood is indicated by the full lines, this denotes its shape prior to loading. The dotted lines indicate the plywood deformation under load. (The deflection).

Copyright in bezit van S.G.B. Group Limited, Mitcham, Surrey. Copyright is the property of S.G.B. Group Limited, Mitcham, Surrey. Copyright est la propriété de S.G.B. Group Limited, Mitcham, Surrey. Copyright ist Eigentum der S.G.B. Limited, Mitcham, Surrey. Copyright owned by S.G.B. Group Limited, Mitcham, Surrey

WILLOW LANE
MITCHAM
SURREY
Tel 01 648 3400

THE MINIMUM BENDING RADII FOR 18, 21 AND 24mm THICK PLYWOOD, TOGETHER WITH CALCULATED STRESSES, ARE SHOWN IN TABLE 2.

TABLE 2

Thickness of Finnish birch faced plywood	Minimum bending radius M	Calculated stress at min. radius using E value shown.		Allowable Stress N/mm^2 From F.P.D.A. data.
		Stress N/mm^2	E N/mm^2	
18mm	5.0	5.78	3290	7.8
21mm	8.7	4.32	3580	7.4
24mm	13.0	3.33	3670	7.12

NOTES:

The information shown in this table is for guidance only.

The stresses shown are those calculated for when the plywood is curved to the radii shown, and they have been based upon the 'E' values for Finnish birch faced plywood (as published by the Finnish Plywood Development Association) with a moisture content of approximately 27%.

It must be appreciated that because plywood is not a homogeneous material and is made from organic material, which readily absorbs or liberates moisture, the 'E' value can vary considerably. This means that the elasticity or rigidity of the material can also vary considerably and as a result so can the stresses for the same radius.

The table should not therefore be regarded as containing "worst case" stresses.

Copyright in bezit van S.G.B. Group Limited, Mitcham, Surrey. Copyright est la propriété de S.G.B. Group Limited, Mitcham, Surrey. Copyright ist Eigentum der S.G.B. Limited, Mitcham, Surrey. Copyright S.G.B. Group Limited 19 proprietors.

WILLOW LANE
MITCHAM
SURREY
Tel 01 648 3400

SECTION 4

EXPLANATORY DETAILS

Recommended setting-out details of ply fixing screws for 2.7, 3.0 and 3.6 high forms.

Main details and alternative details.

ISSUED BY SGB GROUP RESEARCH AND DEVELOPMENT DIVISION - MITCHAM, ENGLAND.

UDO 40129

Copyright owned by S.G.B. Group Limited, Mitcham, Surrey. Reproduction or disclosure to third parties in any form whatsoever not allowed without the written consent of S.G.B. Group Limited.

Copyright ist Eigentum der S.G.B. Limited, Mitcham, Surrey. Vervielfältigung oder Bekanntgabe an Dritte, in welcher Form auch immer, ohne schriftliche Zustimmung der Eigentümerin nicht gestattet.

Copyright est la propriété de S.G.B. Group Limited, Mitcham, Surrey. La reproduction ou la communication à des tiers, sous quelque forme que ce soit n'est autorisée que par écrit de la propriétaire.

NOTES ON DETAILS.

These notes should be read in conjunction with the details in the following section.

A. Pages 24 - 28 show the recommended setting out for the screws that are used to fix the plywood sheets to the soldier batten inserts. Screw fixings are used to eliminate plywood indentation and thus keep concrete marking to a minimum, and for a high standard of concrete finish it is recommended that the plywood is countersunk to receive the screw heads, thus limiting ply splintering when screwing down. It is important to ensure minimum screw penetration is achieved in the timber batten when thick sheets of plywood are used. No. 12 screws are recommended throughout.

For 24 and 21 thick ply use 64 long screws.
For 18 thick ply use 57 long screws.

B. The number of screws has been kept to a minimum (within Code of Practice design criteria)* to keep ply face penetration to a minimum. It is important therefore that timber batten inserts are of a reasonably good quality; GS grade redwood/whitewood species is one which is readily available. All holes should be pre-drilled. If the quality of the timber available is suspect, or it is likely that several different plywood sheets will be screwed into the same battens thus decreasing the screw pull-out value, the designer or customer should consider through-bolting the ply directly on to the J4 soldier, as shown on sheet 34. This need only be done say twice in a soldiers length with the screws (as detailed) between.

C. For the reasons of limiting plywood indentation, etc., listed in note A above, where a high quality concrete finish is desired it may be necessary to countersink the plywood to receive the angle fixing bolt heads flush with the plywood.

* CP.112: Part 2 - The Structural use of Timber.

Copyright in bezit van S.G.B. Group Limited, Mitcham, Surrey. Vermenigvuldiging of mededeling aan derden in welke vorm de ... is z... schri... toes... ng van ... nares nie... oorloofd...
Copyright est la propriété de S.G.B. Group Limited, Mitcham, Surrey. La reproduction ... la communication ... des tiers, ... quelque ... n'est p... qu'autorisé ... écrite du propriétaire.
Copyright ist Eigentum der S.G.B. Limited, Mitcham, Surrey. Vervielfältigung ... Bek... an D... in welcher Form auch ... schriftlich ... ung d... entun... nicht gestattet.
Copyright owned by S.G.B. Group Limited, Mitcham, Surrey. ... to ... parties ... any ... without ... written ... of ... proprietors. © Copyright S.G.B. Group Limited 19...

SGB GROUP LIMITED

SGB CIRCULAR FORMWORK SYSTEM.
EXPLANATORY DETAILS.

WILLOW LANE
MITCHAM
SURREY
Tel 01 648 3400

Ref No. J19
Page No. 24
Date Nov. 1979

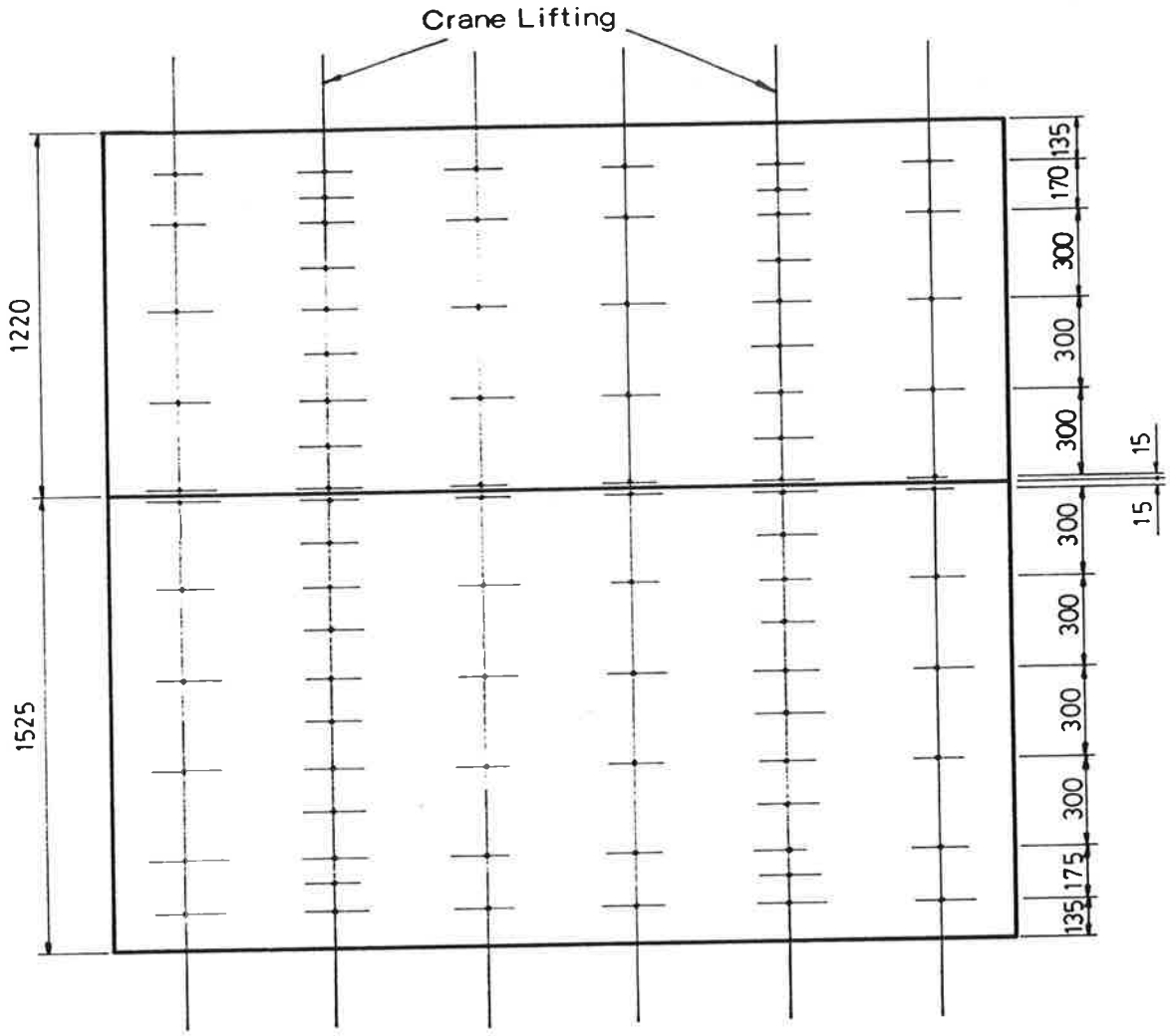

2.7 HIGH FORM.

RECOMMENDED SETTING OUT FOR PLY FIXING SCREWS.

Note spacings on soldiers used for crane lifting.

Refer to sheet 29 for screw details.

See Note A, sheet 23.

Copyright owned by S.G.B. Group Limited, Mitcham, Surrey. Reproduction or disclosure to third parties in any form whatsoever, not acceptable without the written consent of the proprietors. © Copyright S.G.B. Group Limited 19

Copyright ist Eigentum der S.G.B. Limited, Mitcham, Surrey. Vervielfältigung der Bekanntgabe an Dritte, in welcher Form ... ohne ... Eigentümer ... nicht gestattet.

Copyright est la propriété de S.G.B. Group Limited, Mitcham, Surrey. La reproduction ou la communication à des tiers sous quelque forme qu'elle soit n'est ... écrite ... propriétaire.

Copyright in bezit van S.G.B. Group Limited, Mitcham, Surrey. Vermenigvuldiging of mededeling aan derden in welke vorm ... ook, ... der ... ijke ... ming ... geoorlo...

WILLOW LANE
MITCHAM
SURREY
Tel 01 648 3400

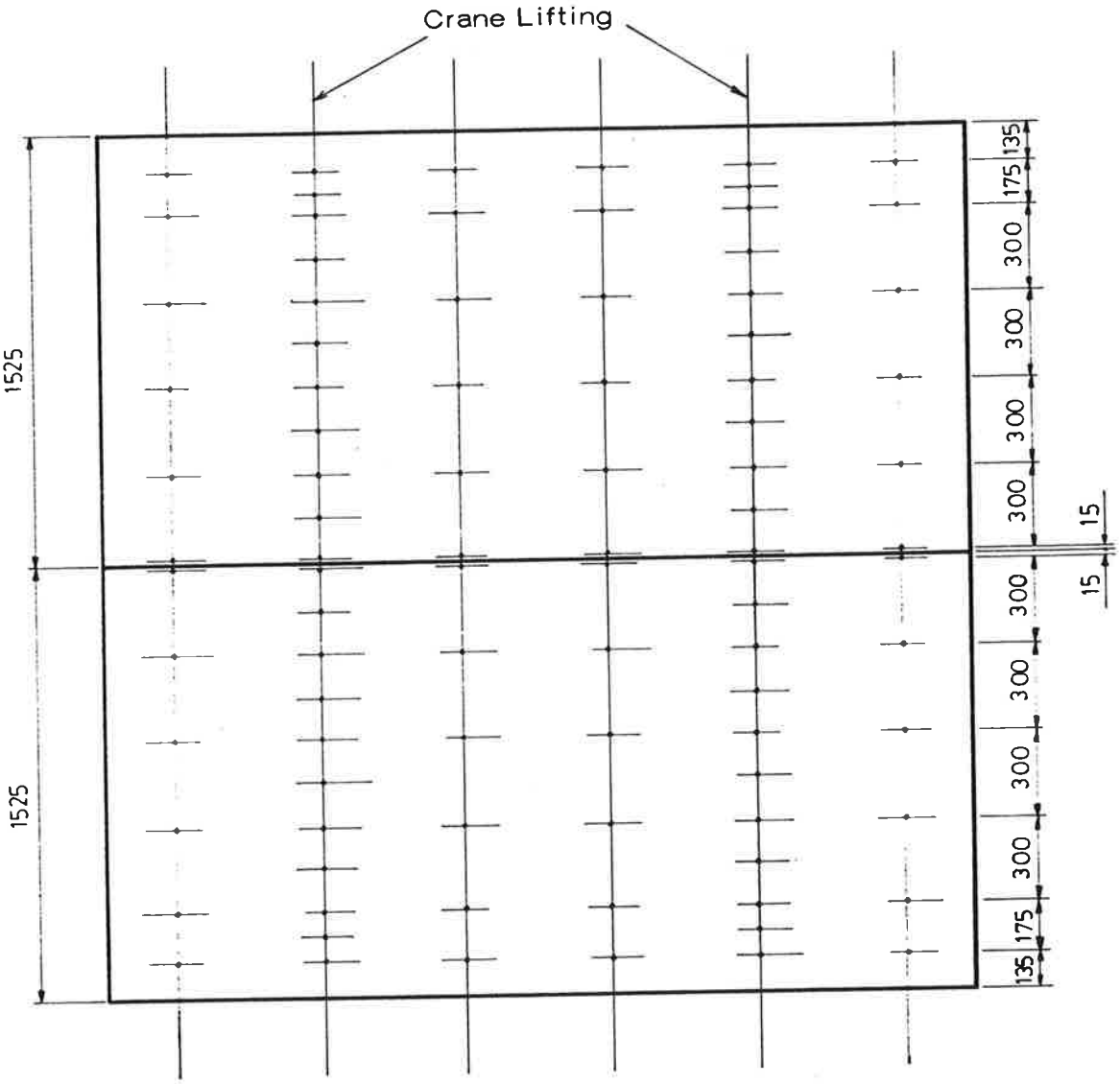

3.0 HIGH FORM.

RECOMMENDED SETTING OUT FOR PLY FIXING SCREWS.

Note spacings on soldiers used for crane lifting.

Refer to sheet 29 for screw details.

See Note A, sheet 23.

Copyright owned by S.G.B. Group Limited, Mitcham, Surrey. Reproduction or disclosure to third parties in any form whatsoever is not permitted without the written consent of S.G.B. Group Limited, Mitcham, Surrey, 1979

Copyright ist Eigentum der S.G.B. Limited, Mitcham, Surrey. Vervielfältigung oder Bekanntgabe an Dritte, in welcher Form ohne Eigentümlichkeit.

Copyright est la propriété de S.G.B. Group Limited, Mitcham, Surrey. Toute reproduction ou la communication à des tiers sous quelque forme que soit n'est écrite propriété

Copyright in bezit van S.G.B. Group Limited, Mitcham, Surrey. Vermenigvuldiging of mededeling aan derden in welke vorm ook, geoor

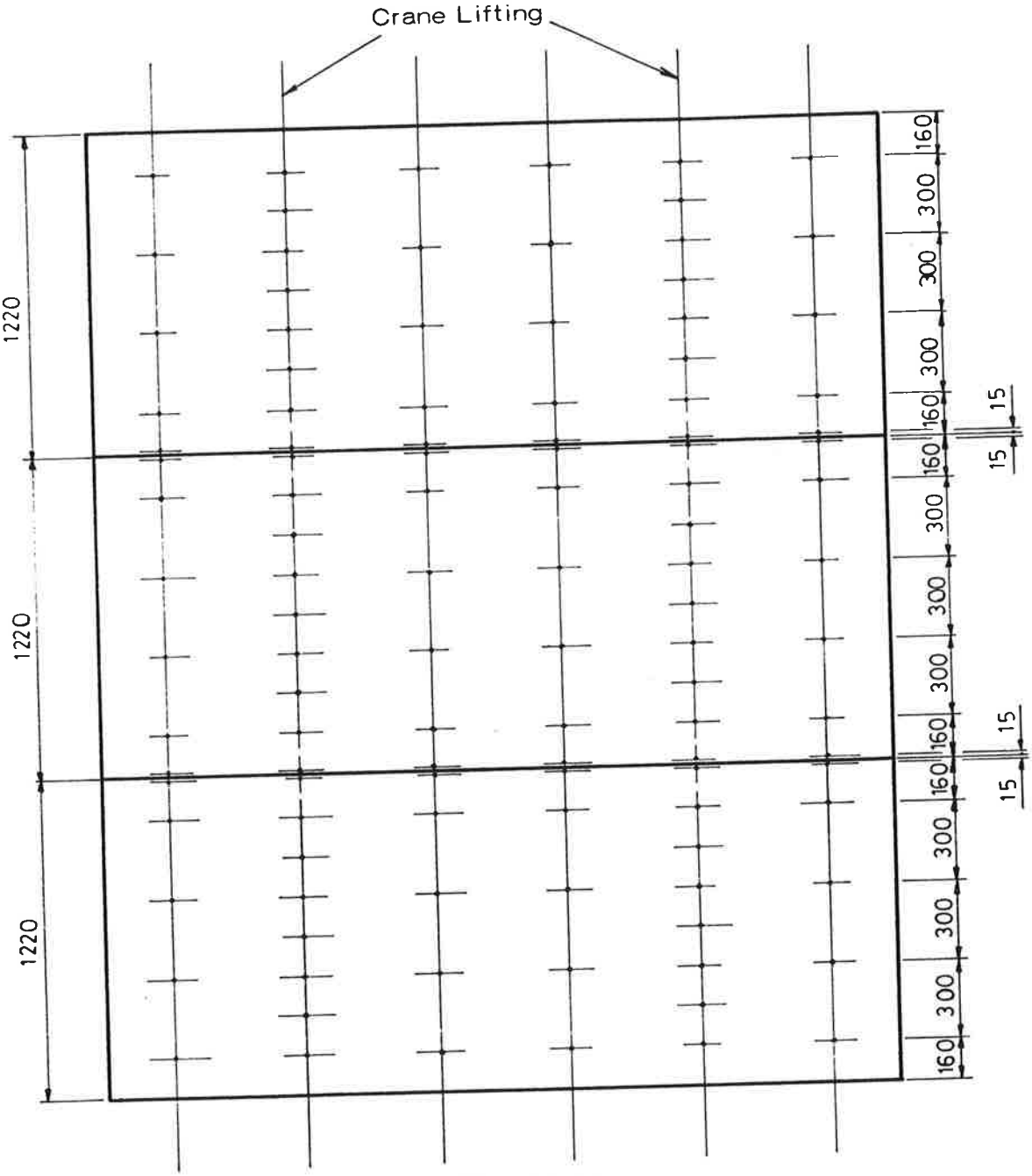

3.6 HIGH FORM.

RECOMMENDED SETTING OUT FOR PLY FIXING SCREWS.

Note spacings on soldiers used for crane lifting.

Refer to sheet 29 for screw details.

(Where alternative ply sheet sizes are used for this height of form, see Data Sheet 27 for screw fixings.)

See Note A, sheet 23.

Copyright owned by S.G.B. Group Limited, Mitcham, Surrey. Copyright in bezit van S.G.B. Group Limited, Mitcham, Surrey. Copyright est la propriété de S.G.B. Group Limited, Mitcham, Surrey. Copyright ist Eigentum der S.G.B. Limited, Mitcham, Surrey.
© Copyright S.G.B. Group Limited

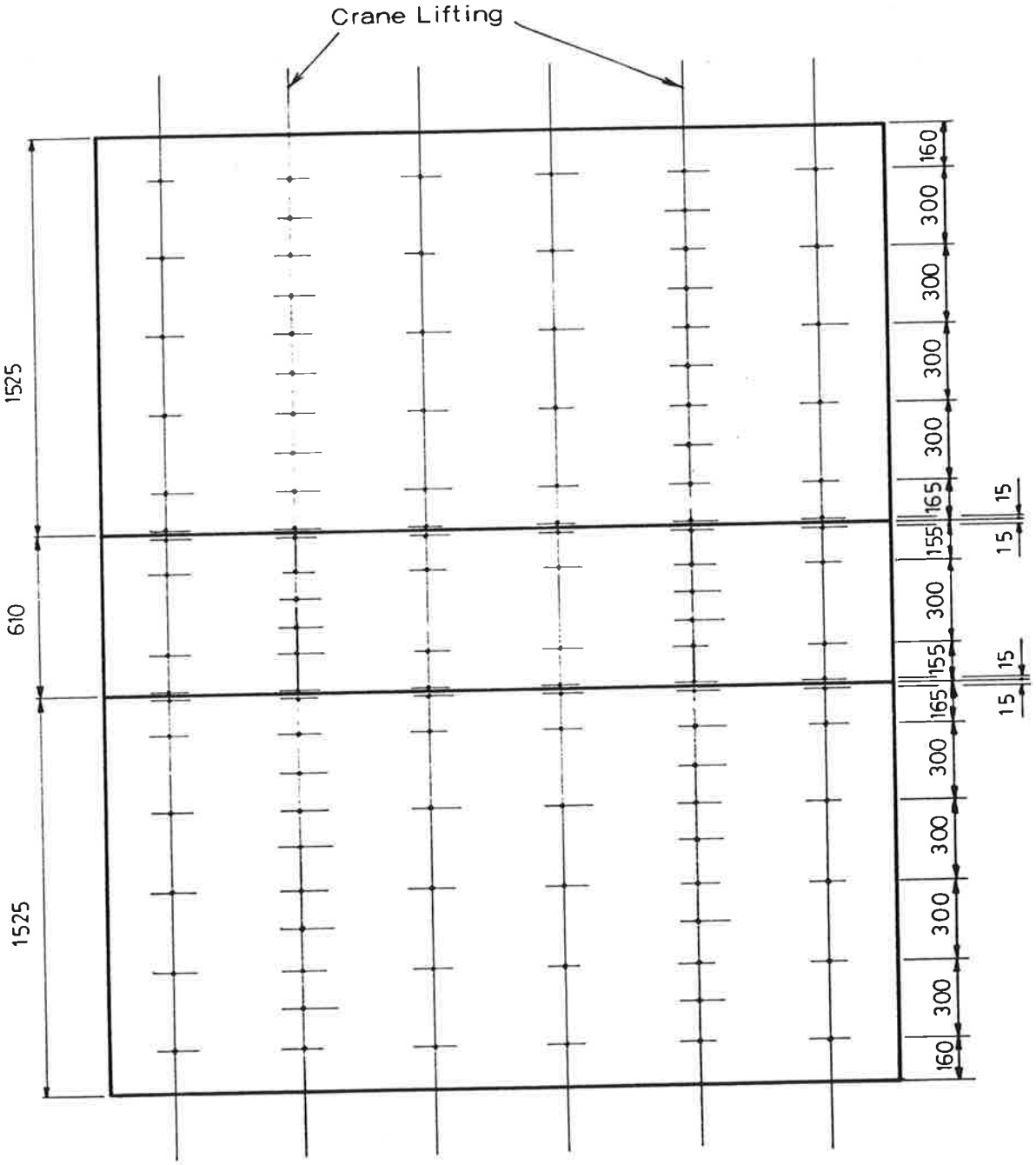

3.6 HIGH FORM (TYPE 2).

RECOMMENDED SETTING OUT FOR PLY FIXING SCREWS.

Note spacings on soldiers used for crane lifting.

Refer to sheet 29 for screw details.

See Note A, sheet 23.

Copyright owned by S.G.B. Group Limited, Mitcham, Surrey. Reproduction or disclosure to third parties in any form whatsoever is not allowed with the written consent of the proprietors. © Copyright S.G.B. Group Limited 1979

Copyright ist Eigentum der S.G.B. Limited, Mitcham, Surrey. Vervielfältigung der Beschreibung an Dritte, in welcher Form auch ohne schriftliche Genehmigung Eigentum nicht geschützt.

Copyright est la propriété de S.G.B. Group Limited, Mitcham, Surrey. Reproduction ou la communication à des tiers sous quelque forme que soit n'est autorisée que sous écrite de propriété.

Copyright in bezit van S.G.B. Group Limited, Mitcham, Surrey. Vermenigvuldiging of mededeling aan derden in welke vorm ook, in der schriftelijke toestemming geoorloofd.

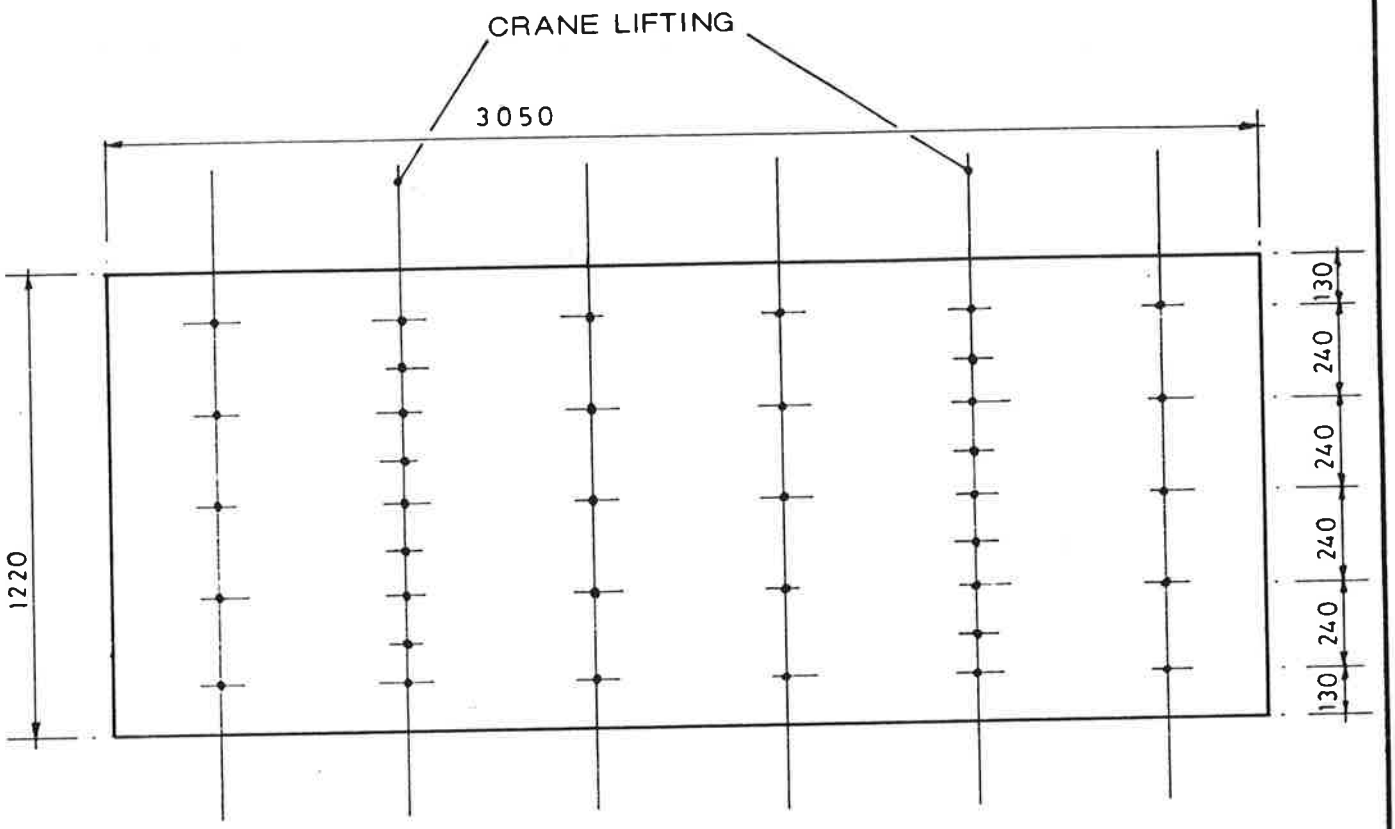

1.2m HIGH FORM

RECOMMENDED SETTING OUT FOR PLY FIXING SCREWS.

The 1.2m long J4 soldier, used in conjunction with a 1.22m wide single plywood sheet (as shown above) makes an ideal shutter form for bund walls, car park ramp walls, parapets, etc.

The principles of design, setting out and assembly are, of course, the same as those for the larger form units, with two exceptions, viz:- concrete pressure and turnbuckle arrangement. Concrete pressures will usually be quite low for structures using the 1.2 system and only one turnbuckle need be used to achieve the radii.

A further application for the 1.2m unit is its use as a template for erecting curved brickwork bund walls. In this non-structural application it will only be necessary to fix the plywood to three soldiers, two at each end to receive the stabilisers and form jacks and one in the middle to secure the turnbuckle after curving. Similarly, as no pressures are involved in this application, the plywood thickness can be reduced; 6.5, 9 and 12mm thicknesses are available for consideration.

Copyright in bezit van S.G.B. Group Limited, Mitcham, Surrey. Vermenigvuldiging of mededeling aan derden in welke vorm ook, is onder sc... jke tc... ming ... genare geoorlo...

Copyright est la propriété de S.G.B. Group Limited, Mitcham, Surrey. Reproduction ou la communication à des tiers sous quelque ... ne qui ... it n'es... e ... l'auto... on écrite d... opriétai...

Copyright ist Eigentum der S.G.B. Limited, Mitcham, Surrey. Ve... Haltigun... der Bek... habe an ... te, in w... er Form ... hne s... che ... nigung ... Eigent... n nicht ge... it.

Copyright owned by S.G.B. Group Limited, Mitcham, Surrey. Reprodu... or di... sure to ... d partir... n any ... hatsoe... not a... d with ... a writt... isent ... proprieto... c Copy... t S.G.B. ... oup Limit... 9

WILLOW LANE
MITCHAM
SURREY
Tel 01 648 3400

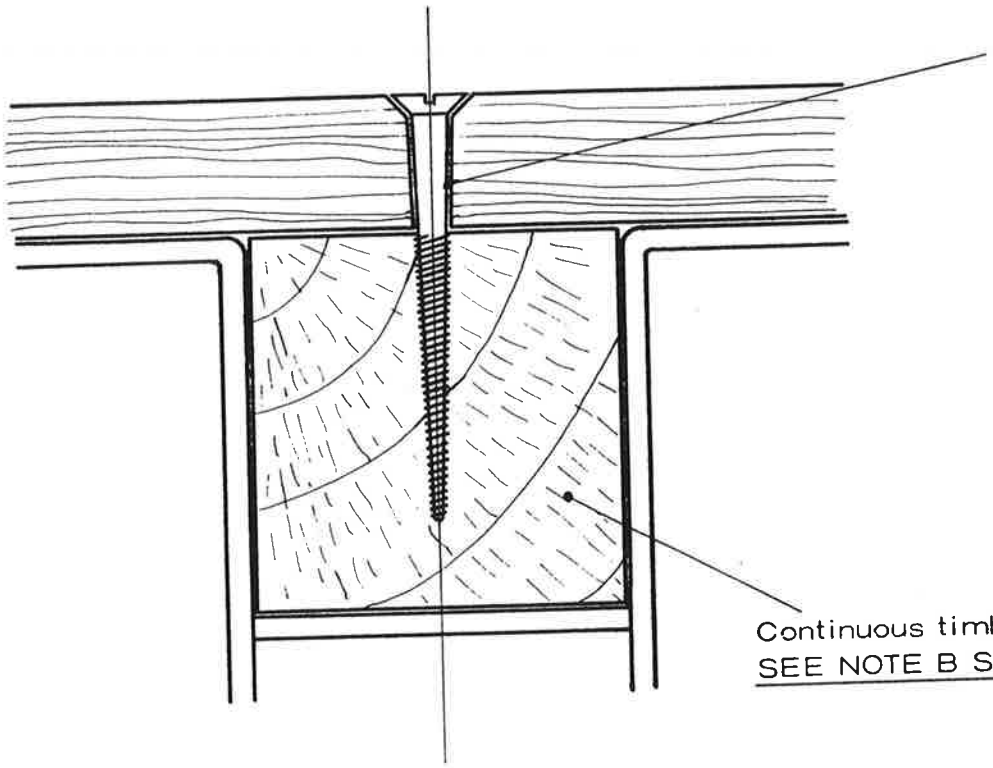

TYPICAL FIXING OF PLY TO TIMBER BATTEN.

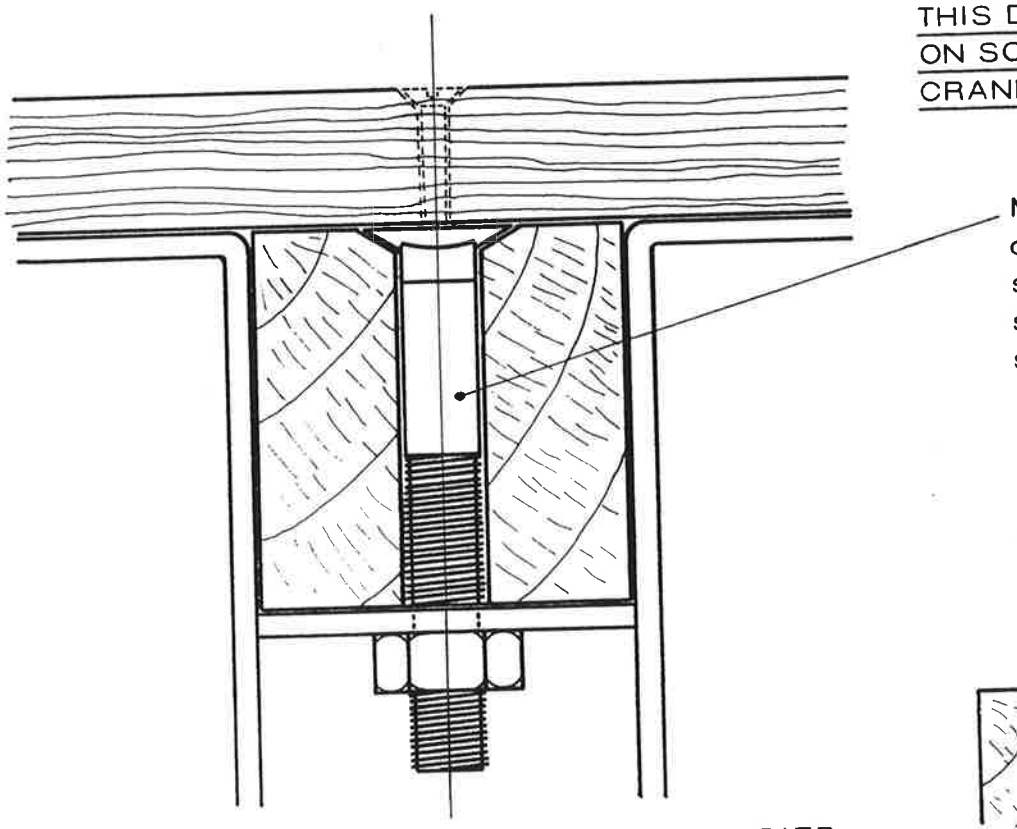

TYPICAL DETAIL FOR FIXING BATTEN TO SOLDIER.
(For alternative detail see Sheets 33 & 34).

Copyright owned by S.G.B. Group Limited, Mitcham, Surrey. Copyright est la propriété de S.G.B. Group Limited, Mitcham, Surrey. Copyright ist Eigentum der S.G.B. Limited, Mitcham, Surrey.
© Copyright S.G.B. Group Limited

SGB GROUP LIMITED
WILLOW LANE
MITCHAM
SURREY
Tel·01·648·3400

SGB CIRCULAR FORMWORK SYSTEM: EXPLANATORY DETAILS.

Ref No. J19
Page No. 30
Date Nov. 1979

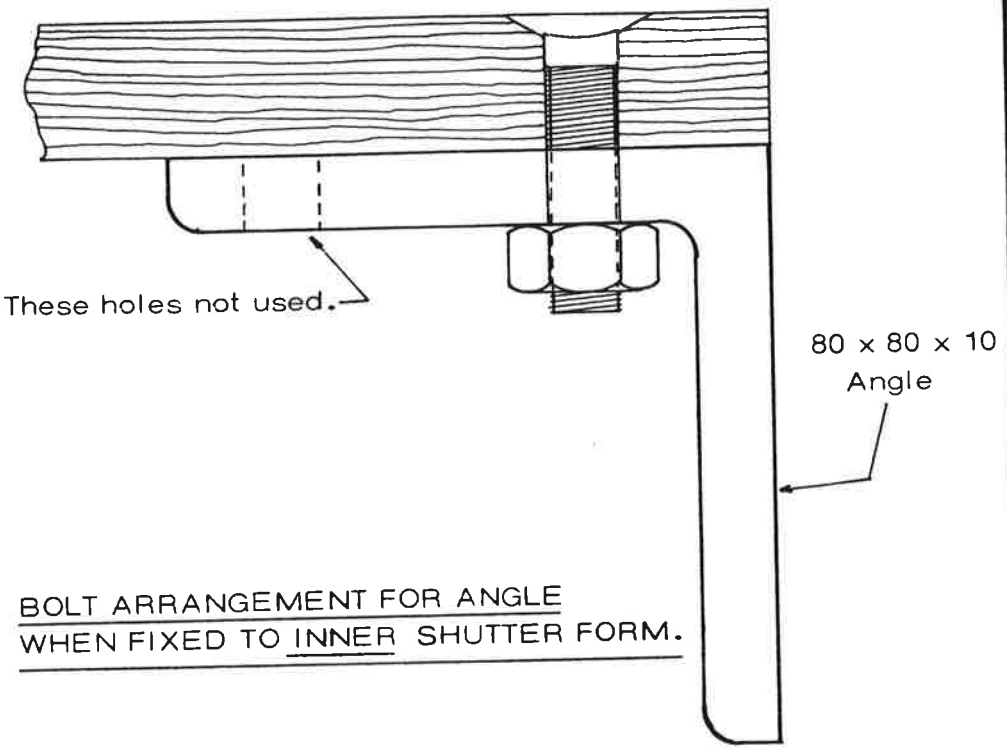

BOLT ARRANGEMENT FOR ANGLE WHEN FIXED TO INNER SHUTTER FORM.

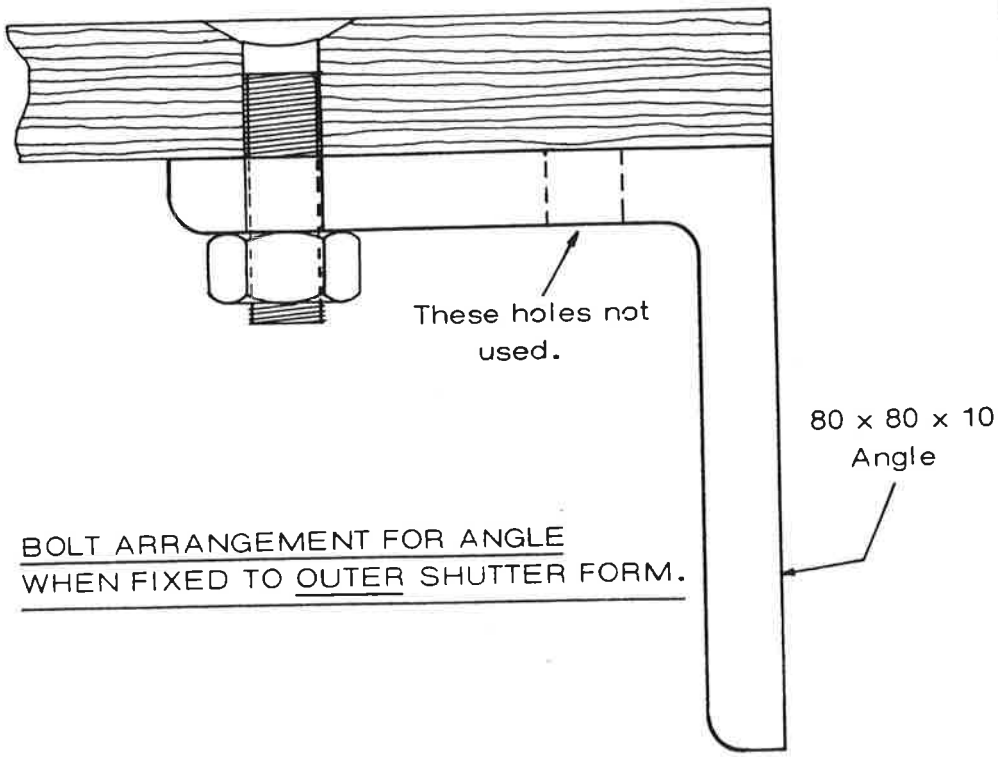

BOLT ARRANGEMENT FOR ANGLE WHEN FIXED TO OUTER SHUTTER FORM.

Copyright owned by S.G.B. Group Limited, Mitcham, Surrey. Copyright est la propriété de S.G.B. Group Limited, Mitcham, Surrey. Copyright ist Eigentum der S.G.B. Limited, Mitcham, Surrey.

UDO 40129

SGB GROUP LIMITED

SGB CIRCULAR FORMWORK SYSTEM.
EXPLANATORY DETAILS.

WILLOW LANE
MITCHAM
SURREY
Tel 01-648-3400

Ref No. J19
Page No. 31
Date Nov. 1979

DETAIL SHOWING TYPICAL ARRANGEMENT OF FORK ARM EDGE ANGLE AND TURNBUCKLE.

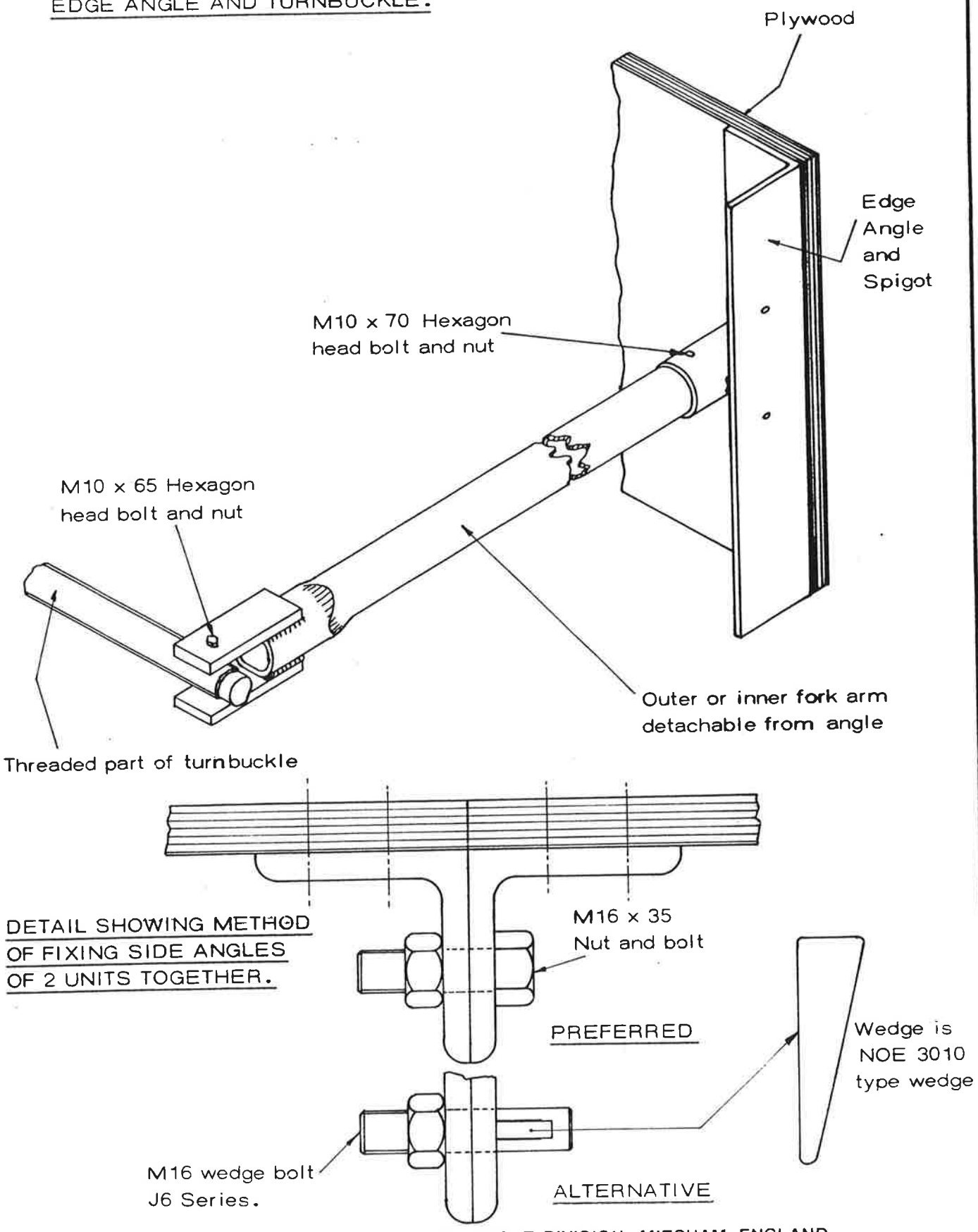

DETAIL SHOWING METHOD OF FIXING SIDE ANGLES OF 2 UNITS TOGETHER.

ISSUED BY SGB GROUP RESEARCH AND DEVELOPMENT DIVISION - MITCHAM, ENGLAND.

UDO 40129

Copyright in bezit van S.G.B. Group Limited, Mitcham, Surrey. Vermenigvuldiging of mededeling aan derden in welke vorm ... genaar ... ook, is ... geoorlo...

Copyright est la propriété de S.G.B. Group Limited, Mitcham, Surrey. ... reproduction ou la communication à des tiers sous quelque ... n'est ... l'autr... ... propriétai...

Copyright ist Eigentum der S.G.B. Limited, Mitcham, Surrey. Ve... ...altigun... ...er Bek... ...abe an ... in w... ...er Form ... nicht ... ...igung ... ...igent ... ...nicht ... ...gestatt.

Copyright owned by S.G.B. Group Limited, Mitcham, Surrey. ... ...proprietor... ...c Copy... ...t S.G.B. ...up Limite... ...9

WILLOW LANE
MITCHAM
SURREY
Tel 01 648 3400

STIFFENING BRACE DETAIL.

NOTE:
STIFFENING BRACES ARE ALWAYS TO BE USED: THEY HOLD THE ARC RIGID AFTER FINAL CURVING. A MIN OF 2 PER TURNBUCKLE ARE RECOMMENDED FIXED FROM TWO CENTRE SOLDIERS, AS SHOWN UNDER (ON ONE SOLDIER).

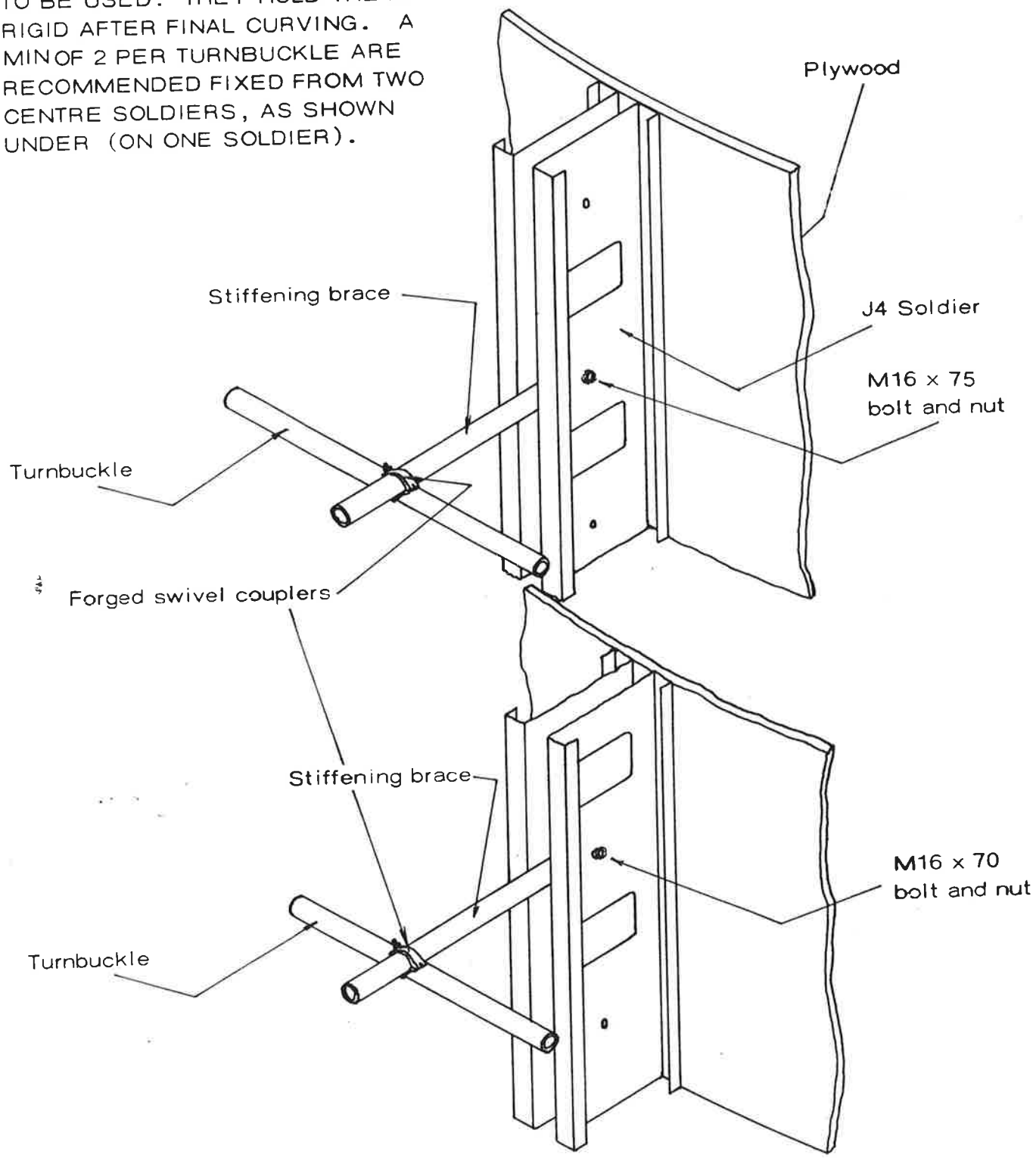

Copyright owned by S.G.B. Group Limited, Mitcham, Surrey. Copyright S.G.B Group Limited. Copyright est la propriété de S.G.B. Group Limited, Mitcham, Surrey. Copyright ist Eigentum der S.G.B. Limited, Mitcham, Surrey.

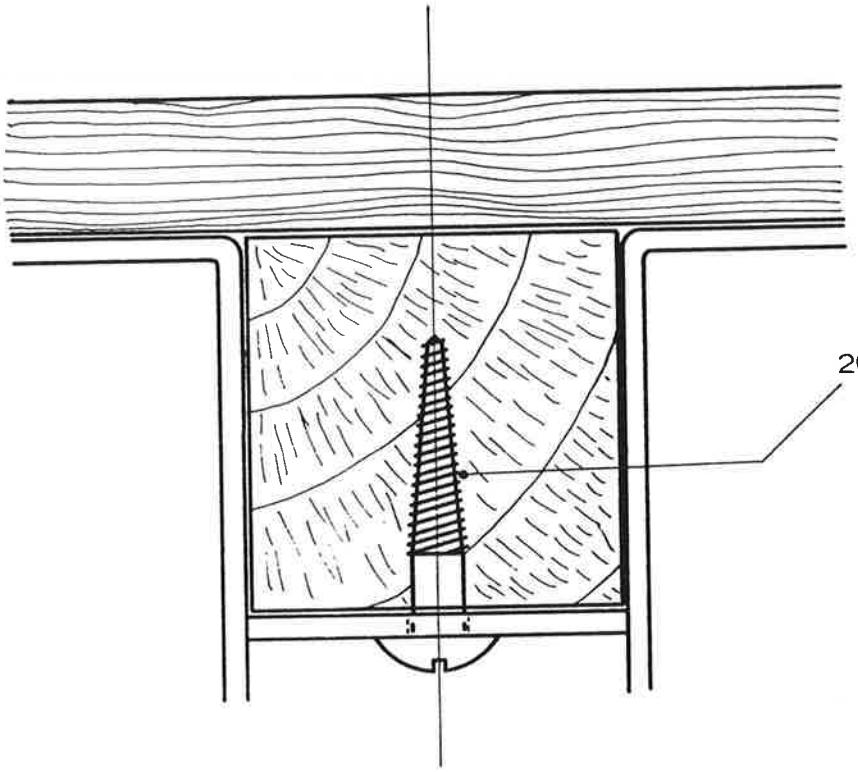

ALTERNATIVE DETAIL FOR FIXING BATTEN TO SOLDIER, BUT ONLY FOR SOLDIERS THAT WILL NOT BE USED FOR CRANE LIFTING.

NOTE: THIS DETAIL IS OBVIOUSLY NOT AS SECURE AS THROUGH BOLTING AND IS NOT RECOMMENDED FOR UNITS THAT WILL RECEIVE HEAVY HANDLING OR FOR UNITS USED ON SECOND LIFTS. WHERE THIS IS THE CASE, USE THE DETAIL SHOWN ON SHEET 29 OR 34.

Copyright in bezit van S.G.B. Group Limited, Mitcham, Surrey. Vermenigvuldiging of mededeling aan derden in welke vorm ... ook ... onder ... eigen ... geoorloofd.

Copyright est la propriété de S.G.B. Group Limited, Mitcham, Surrey. La reproduction ou la communication à des tiers sous quelque forme ... soit n'est ... avec l'autorisation écrite ... propriété.

Copyright ist Eigentum der S.G.B. Limited, Mitcham, Surrey. Vervielfältigung oder Bekanntgabe an Dritte, in welcher Form ... ohne ... Zustimmung ... Eigentümerin nicht ... gestattet.

Copyright owned by S.G.B. Group Limited, Mitcham, Surrey. Reproduction or disclosure to third parties in any form whatsoever is not ... the written consent of the proprietor, c/o Copyright S.G.B. Group Limited 19

WILLOW LANE
MITCHAM
SURREY
Tel 01 648 3400

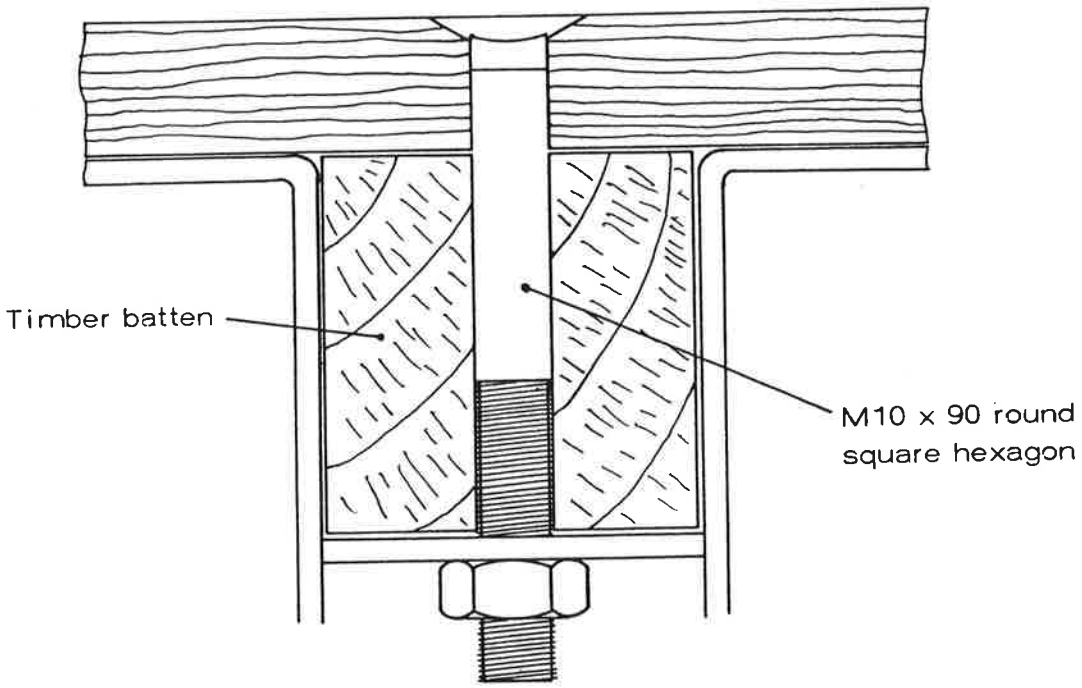

ALTERNATIVE BATTEN FIXING DETAIL.

SEE NOTE B, PAGE 23 FOR EXPLANATION.

Copyright owned by S.G.B. Group Limited, Willow Lane, Mitcham, Surrey. Reproduction or disclosure to third parties in any form whatsoever is not allowed without the written consent of the S.G.B. Group Limited, Willow Lane, Mitcham, Surrey. La reproduction ou la communication à des tiers, sous quelque forme que ce soit n'est pas permise sans l'autorisation écrite préalable de S.G.B. Group Limited, Willow Lane, Mitcham, Surrey. Vervielfältigung oder Bekanntgabe an Dritte, in welcher Form auch immer, ohne ausdrückliche Genehmigung der Eigentümerin nicht gestattet.

WILLOW LANE
MITCHAM
SURREY
Tel 01 648 3400

DETAIL OF STRIKING PIECE.

THIS DETAIL IS REQUIRED AT LEAST ONCE, AS SHOWN ON THE INNER FORM UNITS.

IT IS REQUIRED TO ALLOW THE RELEASE OF THE INNER FORMS WHEN FOR EXAMPLE A CIRCULAR STRUCTURE IS "CLOSED" WITH THE INNER FORMS.

THE DETAIL COULD ALSO BE USED TO ACCOMMODATE TOLERANCE BUILD UP IN BOTH OUTER AND INNER FORMS IF THIS IS CONSIDERED NECESSARY.

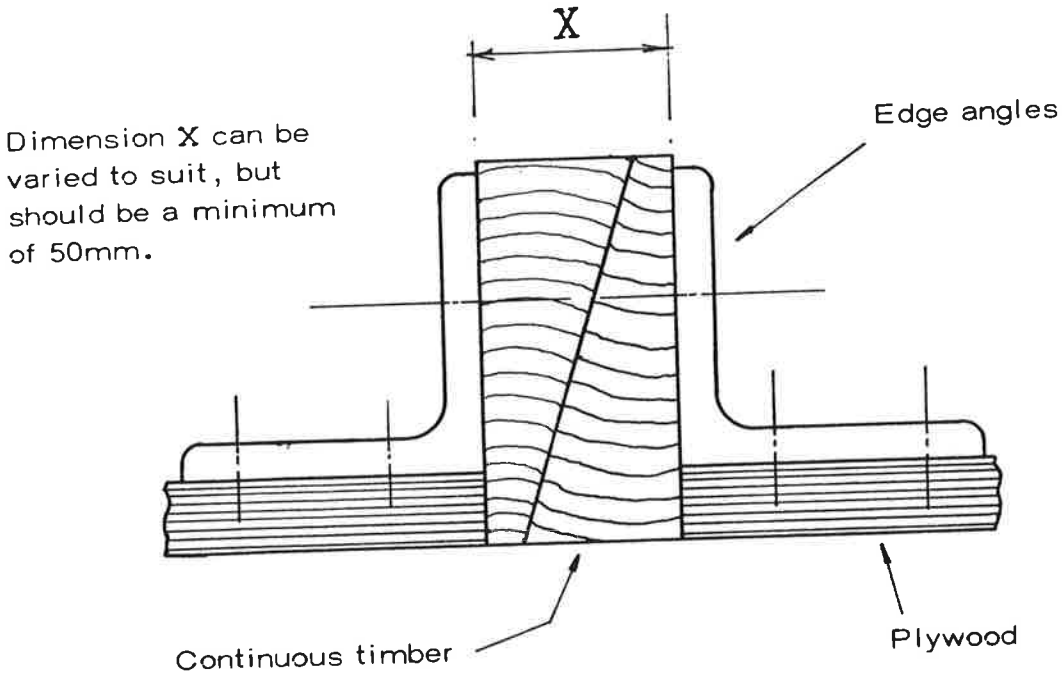

UDO 40129

Copyright in bezit van S.G.B. Group Limited, Mitcham, Surrey. Copyright is the property of S.G.B. Group Limited, Mitcham, Surrey. Copyright S.G.B. Group Limited 19

WILLOW LANE
MITCHAM
SURREY
Tel 01 648 3400

SECTION 5

ON SITE GUIDANCE

Assembling the outer and inner form units.

Copyright owned by S.G.B. Group Limited, Mitcham, Surrey. Reproduction or disclosure to third parties in any form whatsoever is not permitted without the written consent of S.G.B. Group Limited, Mitcham, Surrey. 19

Copyright ist Eigentum der S.G.B. Limited, Mitcham, Surrey. Vervielfältigung oder Bekanntgabe an Dritte, in welcher Form ohne schriftliche Genehmigung der Eigentümer nicht zulässig ist.

Copyright est la propriété de S.G.B. Group Limited, Mitcham, Surrey. La reproduction ou la communication à des tiers sous quelque forme que ce soit sans l'autorisation écrite préalable de la propriété.

Copyright in bezit van S.G.B. Group Limited, Mitcham, Surrey. Vermenigvuldiging of mededeling aan derden in welke vorm ook, zonder schriftelijke toestemming van eigenaar geoorloofd.

ASSEMBLY OF THE OUTER FORM	Explanatory diagrams or remarks.
1. Insert and fix 50 x 50 battens to soldiers.	See Data Sheets 29, 33 and 34.
2. Lay soldiers down on any surface which is reasonably firm, flat and even. Space the soldiers out to the required soldier centres (see Data Sheets 18, 19, 20) ensuring they are all parallel, with ends in line, and cannot easily be moved out of position. Two or three templates can be simply made for this purpose, as suggested in the diagram.	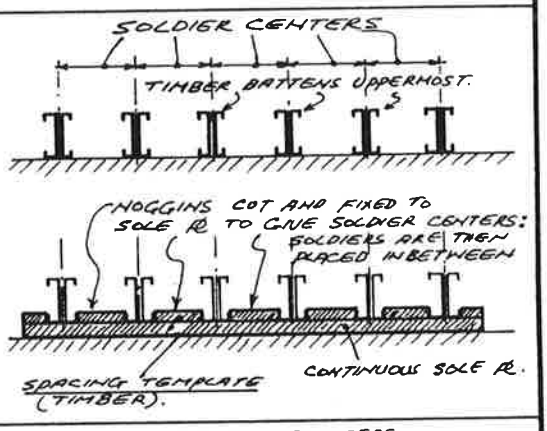
3. Place the plywood onto the soldiers, having previously marked on the plywood the centre lines which correspond to the centre lines of the soldiers. This allows the ply fixing screws to be accurately positioned into the batten from above. Ensure the ply sheets are parallel with the soldiers and cannot easily be moved out of position during fixing. A few weights, appropriately placed on the ply, are normally sufficient.	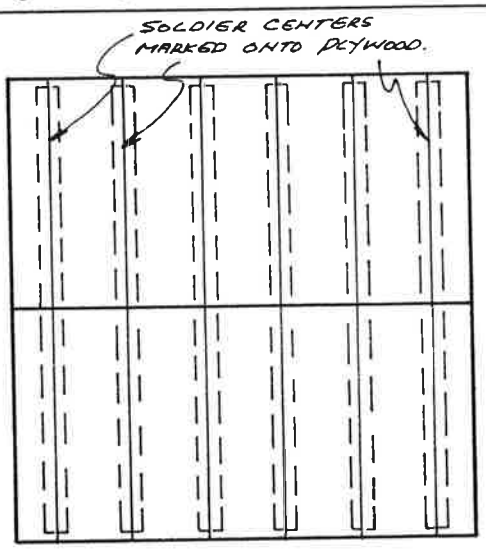 PLAN OF UNIT SHOWING PLY SHEETS LAYED ON SOLDIERS READY FOR SCREWING INTO BATTENS.
4. Drill holes on the centre lines through the ply and into the batten to receive the ply fixing screws.	See Data Sheets. 23 to 29 incl. Take particular note of arrangement and spacing of screws.
5. Clamp the pre-drilled edge angle to the edges of the ply (see Data Sheets 11 and 30) for exact positions) and use as template to drill fixing holes in ply. Angle may then be bolted to ply in its permanent position, shown dotted in diagram. Alternatively, angles may be clamped, drilled and fixed from the permanent side, usually only possible when the unit is vertical. ONLY ONE OR THE OTHER LINE OF HOLES ARE USED TO FIX THE EDGE ANGLE. SEE SHEET 30 FOR GUIDANCE.	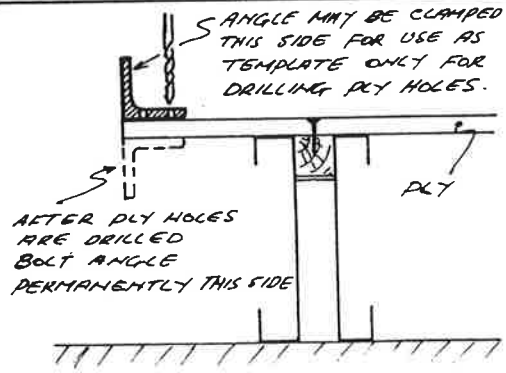
6. Fix lifting brackets to soldiers 2 and 5.	See Data Sheets J4 section.
7. The unit is now ready for lifting into vertical position	
8. Fit fork arms and turnbuckles to edge angle, as shown on working drawing.	For the number and position of the turnbuckles see sheets
9. Curve the Unit	See Data Sheets 39 to 42 incl.

Copyright in bezit van S.G.B. Group Limited, Mitcham, Surrey. Copyright est la propriété de S.G.B. Group Limited, Mitcham, Surrey. Copyright ist Eigentum der S.G.B. Limited, Mitcham, Surrey. Copyright S.G.B. Group Limited, Mitcham, Surrey

WILLOW LANE
MITCHAM
SURREY
Tel 01-648 3400

ASSEMBLY OF THE INNER FORM.

The assembly of the inner form is basically the same as that for the outer form, Items 1 - 9, Data Sheet 37. There are, however, a number of essential differences which must be observed to ensure complete co-ordination between the inner and outer forms when placed in situ.

The differences are listed below.

DIFFERENCES	EXPLANATORY DIAGRAMS.

1. PLYWOOD LENGTH.

It can be readily seen from the diagram that the inner form length will be shorter than the outer form length.

The inner form length can be easily calculated from the following formula.

$$\text{Inner Form Ply length} = 3050 - \frac{3050 \times (T + t)}{R + \frac{t}{2}}$$

(All units to be in millimetres).

Where T = Wall thickness
R = Radius to outside concrete face.
*3050 = Outside form ply length.
t = Plywood thickness

* The figure of 3050 is the standard stock length of ply sheets, but should a non-standard length be used, this new figure may be substituted in the above formula where 3050 occurs.

The result will always give the length of the inner ply face in millimetres.

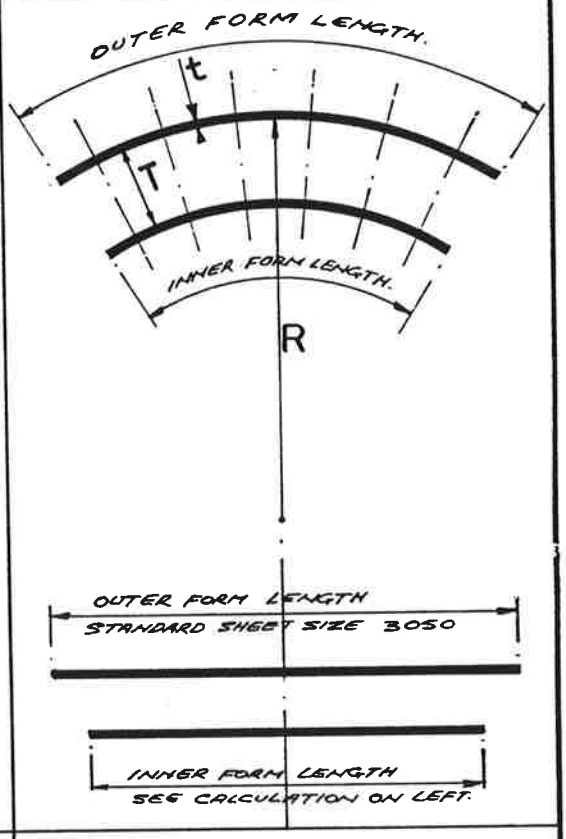

2. SOLDIER CENTRES.

Similarly it can be seen that the soldier centres of the inner form will vary from the outer centres. The following formula will provide the required inner form soldier centres C_i =

$$C_o - \frac{C_o\,(T + 2t)}{R + t} \quad \text{(all units to be in mm)}$$

Where C_i = required inner form soldier centres.
C_o = Outer form soldier centres.
T = Wall thickness.
t = Plywood thickness.
R = Radius to outside concrete face.

The result will give the required inner centres in millimetres to match the radial line for the radius chosen.

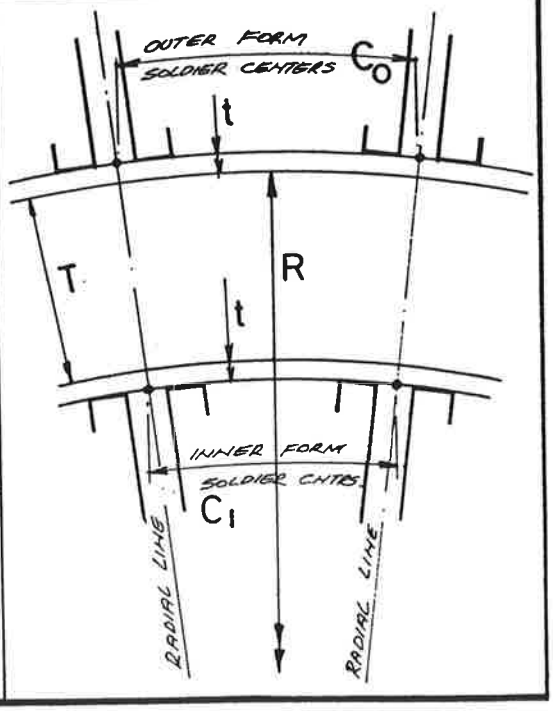

Copyright owned by S.G.B. Group Limited, Mitcham, Surrey. Reproduction or disclosure to any third party without the written consent of S.G.B. Group Limited, Mitcham, Surrey.

SECTION 6

CURVING THE FORMS

Preamble to curving - Guidance notes.

Explanation of curving the outer and inner forms.

ISSUED BY SGB GROUP RESEARCH AND DEVELOPMENT DIVISION - MITCHAM. ENGLAND.

JDO 40129

Copyright owned by S.G.B. Group Limited, Mitcham, Surrey. Reproduction or disclosure to third parties in any form whatsoever is not allowed without the written consent of the proprietor c Copyright S.G. Group Limited 19

Copyright ist Eigentum der S.G.B. Limited, Mitcham, Surrey. Vervielfältigung oder Bekanntgabe an Dritte, in welcher Form ohne ... Eigen... nicht ... tit.

Copyright est la propriété de S.G.B. Group Limited, Mitcham, Surrey. La reproduction ou la communication à des tiers, sous quelq... soit n'e... écrite ... opriét...

Copyright ... Vermenigvuldiging of mededeling aan derden in welke vorm ook, ... nder ... lijke t... mming ... eigenar... geoor...

The following Data Sheets (Nos.41& 42) explain the curving procedure for the outer and inner shutter form units.

This page is a preamble for these sheets and the contents should be observed throughout the curving procedure. Especially item 3.

1. VERTICAL AND HORIZONTAL ALIGNMENT.

Prior to curving, with the plywood flat, the unit should be levelled to a near vertical and horizontal plane. The most important pre-curve check is to ensure all the soldiers are in the same vertical plane; this is to say that no soldier(s) leans forward or back from the others. This can be checked simply by eye when standing at the side of the unit and sighting down the backs of the soldiers; all the backs should be near enough in line. Appropriate adjustment of the stabiliser jacks is sufficient to ensure this requirement is achieved. The above requirements facilitate accurate curving.

IMPORTANT: Throughout the above initial adjustments and the whole curving procedure it is essential that the stability of the unit against overturning is maintained, for obvious safety reasons. Push-pull props or similar members can be used, strutted off the front of the unit and off the back if stabilisers are not used. Alternatively the unit can remain suspended from the crane during curving.

2. TEMPLATES.

Templates cut to the required internal and external radii are of course essential for the accurate checking of the curve during and after the curving procedure.

These are most practicably made from plywood. The most suitable length for the templates should be approximately 400 to 600mm shorter than the length of the shutter unit.

3. ATTENTION TO FORM JACKS AND STABILISER DURING CURVING.

During the curving procedure the soldiers will always be moving laterally to remain on their radial centre lines.

It is essential that nothing obstructs the soldiers from doing this, as the curve will not develop. Obviously the soldiers most likely to be restricted are those with form jacks and stabiliser brackets affixed. Friction will tend to inhibit these soldiers from moving freely on to their radial lines and thus curving will not develop.

This frictional resistance must not therefore be allowed to develop and can be overcome by frequently rocking the unit or lifting it up at both ends slightly, so that the feet are momentarily off the ground.

Failure to observe the above, especially on small radii, will result in the curve not fully developing.

4. UNIT STABILITY.

Care must be taken at all times to ensure the unit is suitably stabilised against overturning, say due to wind pressure, etc.

Copyright ist Eigentum der S.G.B. Limited, Mitcham, Surrey. Vervielfältigung oder Bekanntgabe an Dritte, in welcher Form ... ohne ... iftliche ... ehmigt ... er Eigr ... erin nic ... attit.

Copyright est la propriété de S.G.B. Group Limited, Mitcham, Surrey. La reproduction ou la communication à des tiers, sous quel ... forme ... soit n ... vec l'a ... ation ... écri ... propri ...

Copyright owned by S.G.B. Group Limited, Mitcham, Surrey. Reproduction or disclosure to third parties in any form whatsoever is not ... wed wi ... the wr ... conser ... the prop ... c ... ght S ... roup L ... 119

SGB GROUP LIMITED
WILLOW LANE
MITCHAM
SURREY
Tel 01 648 3400

SGB CIRCULAR FORMWORK SYSTEM.
CURVING THE OUTER FORM

Ref No. J19
Page No. 41
Date Nov. 1979

1. Ensure the threaded rods at each end of the turnbuckle have approximately equal extension when fixed to the fork arms.

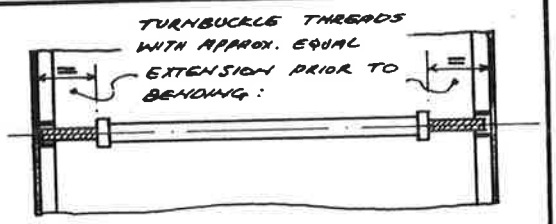

2. Start the curving by turning the nuts on the turnbuckles on one side of the unit so that the threads lengthen; this will automatically induce a concave bend into the plywood. Ensure all the turnbuckles receive about the same amount of turns and that no one turnbuckle is longer than the others by more than about 8 turns during curving. On large radii the elongation of the rods to one side only will be sufficient to reach the desired curve, but for smaller radii it will be necessary to lengthen the rods at both sides of the unit, the method being the same as above.

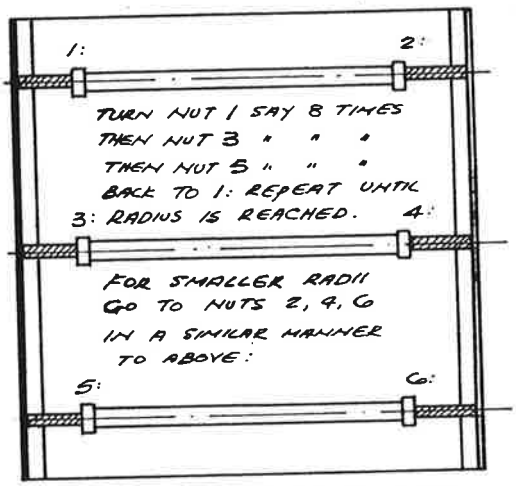

IN FIGS. 1 & 2 SOLDIERS ARE NOT SHOWN.

3. When the desired radius is reached, it may be found that there is a slight flattening of the plywood in the middle. See fig.3A. This can be easily curved by pulling the middle soldiers back to the turnbuckles using the special tool provided. See fig.3B. When the curve is then true to the template, it is 'locked' by fixing a swivel coupler to both the turnbuckle and the stiffening brace which is fixed to the soldier. Note that both the middle soldiers should be fixed to the turnbuckles, even though one may be sufficient to curve the flat, as this gives improved stability.

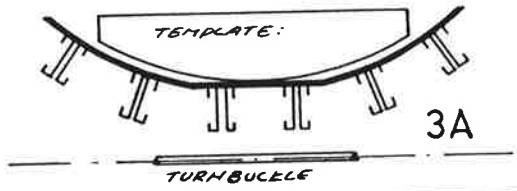

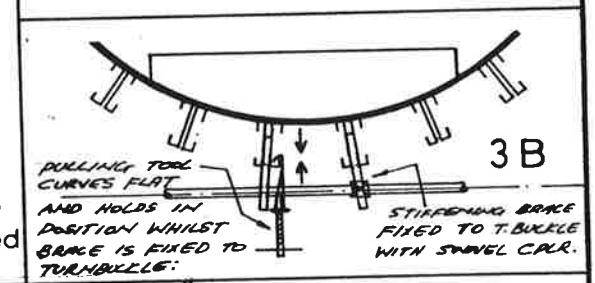

4. (a) A check with the template at the edges of the unit may show the edge to be too far past the true curve. The edge(s) can be pulled back in line by turning the nuts on the turnbuckles, so that the rods shorten, thus bringing the edge back to the true curve. This operation does not affect the main curved portion of the unit previously formed, as this is locked in position by the stiffening braces, as described in (3) above.

(b) A final check of the unit should be made with the template over its full height. Any remaining irregularities in the curve can be eradicated, using one or both the methods described in 3 and 4 above.

The unit is now ready for positioning.

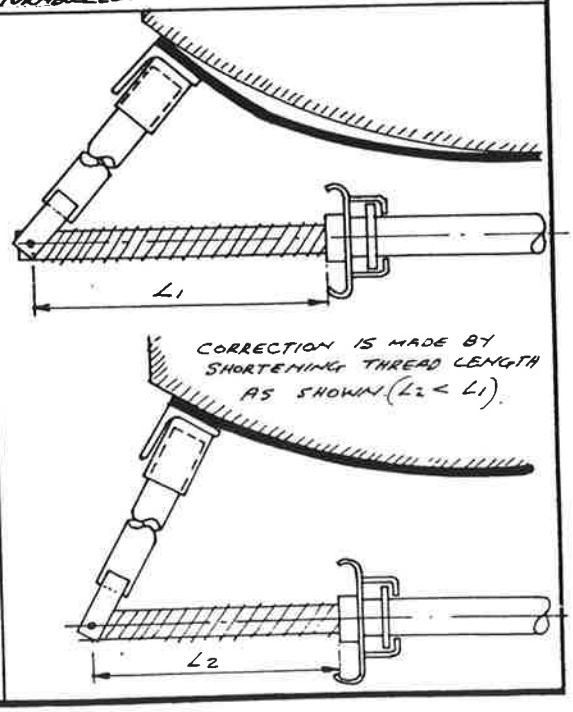

Copyright owned by S.G.B. Group Limited, Mitcham, Surrey. Reproduction in any form or by any means whatsoever is not permitted without written consent of the proprietors. © Copyright S.G.B. Group Limited 19

WILLOW LANE
MITCHAM
SURREY
Tel 01 648 3400

The curving of the inner form is similar in procedure to the curving of the outer form.

The essential difference is that the form must, of course, take up a convex curve.

The following item numbers correspond to items 1 to 4 on sheet 41 for reference.

1. Ensure that the threaded rods at each end of the turnbuckle have approximately equal extension.

2. Start the curving by turning the nuts on the turnbuckle on one side of the unit, so that the threads shorten; this will automatically induce a convex bend into the plywood. Ensure that all the turnbuckles receive about the same amount of turns and that no one turnbuckle is longer than the others by more than about 8 turns during curving. On large radii the shortening of the rods to one side only will be sufficient to reach the desired curve, but for smaller radii it will be necessary to shorten the rods at both sides of the unit.

3. A flattening of the plywood in the middle of the curve, as described in Item 3, sheet 41 is not normally encountered when bending the inner form. However, if flattening does occur it can be corrected in a similar manner.

4. (a) Correction of the edges should only be necessary on small radii, see Item 4, sheet 41. If edge correction is necessary, the nuts on the turnbuckles may be adjusted either way (usually lengthened) to correct the curve at the edge.

   (b) A final check of the form with the template is then made. The unit is now ready for positioning.

Copyright owned by S.G.B. Group Limited, Mitcham, Surrey. Reproduction or disclosure to third parties in any form whatsoever is not permitted without the written consent of S.G.B. Group Limited, Mitcham, Surrey. 1979

Copyright ist Eigentum der S.G.B. Limited, Mitcham, Surrey. Vervielfältigung oder Bekanntgabe an Dritte, in welcher Form ohne ausdrückliche schriftliche Erlaubnis der S.G.B. Group Limited, Mitcham, Surrey ist nicht gestattet.

Copyright est la propriété de S.G.B. Group Limited, Mitcham, Surrey. La reproduction ou la communication à des tiers, sous quelque forme que ce soit, sans l'autorisation écrite préalable de S.G.B. Group Limited, Mitcham, Surrey est interdite.

Copyright in bezit van S.G.B. Group Limited, Mitcham, Surrey. Vermenigvuldiging of mededeling aan derden in welke vorm dan ook zonder de uitdrukkelijke toestemming van S.G.B. Group Limited, Mitcham, Surrey is verboden.

SECTION 7

FORM UNITS WITH J29 MK.II. SOLDIERS

Copyright in bezit van S.G.B. Group p.l.c. Mitcham, Surrey. Vermenigvuldiging of mededeling aan derden in welke vorm dan ook, is zonder schriftelijke toestemming van eigenares niet geoorloofd.

Copyright est la propriété de S.G.B. Group p.l.c. Mitcham, Surrey. La reproduction ou la communication à des tiers, sous quelque forme que ce soit n'est permise qu'avec l'autorisation écrite du propriétaire.

Copyright ist Eigentum der S.G.B. Group p.l.c. Mitcham, Surrey. Vervielfältigung oder Bekanntgabe an Dritte, in welcher Form auch, ohne schriftliche Genehmigung der Eigentümerin nicht gestattet.

Copyright owned by S.G.B. Group p.l.c. Mitcham, Surrey. Reproduction or disclosure to third parties in any form whatsoever is not allowed without the written consent of the proprietors. ©Copyright S.G.B. Group p.l.c. 1985

CIRCULAR SHUTTERING WITH J29 MK II SOLDIERS

A 1.8 long edge angle has been added to the range for use in conjunction with the 1.8 J29 Soldier. Table 3 shows standard shutter heights, the appropriate J4 or J29 soldier length together with the correct type of edge angle designed to suit the plywood modules.

TABLE 3

SHUTTER HEIGHT (overall plywood) (mm)	J4 SOLDIER LENGTH : (mm)	J29 SOLDIER LENGTH : (mm)	USE EDGE ANGLE LENGTH : (mm)
3660 (3 x 1220 sheets). OR (2 x 1525 sheets + 1 x 610 sheet).	3600	3600	3600
3050 (2 x 1525 sheets)	3000	3150	3000
2745 (1 x 1525 sheet + 1 x 1220 sheet)	2700	2700	2700
1830 (3 x 610 sheets). OR (1 x1220 sheet + 1 x 610 sheet).	NONE	1800	1800
1220 (1 x 1220 sheet)	1200	1125	1200

NOTES: (1) Edge angles must be bolted to the plywood modules observing the vertical setting-out dimensions shown on data sheets 11 & 46.

(2) Vertical setting out of soldiers will be dependent upon construction criteria, e.g. the presence of a kicker or the connection of multiple height forms etc. as determined at scheme stage by the designer.

Copyright in bezit van S.G.B. Group p.l.c. Mitcham, Surrey. Vermenigvuldiging of mededeling aan derden in welke vorm den ook, is zonder schriftelijke toestemming van eigenares niet geoorloofd.

Copyright est la propriété de S.G.B. Group p.l.c. Mitcham, Surrey. La reproduction ou la communication à des tiers, sous quelque forme que ce soit n'est permise qu'avec l'autorisation écrite du propriétaire.

Copyright ist Eigentum der S.G.B. Group p.l.c. Mitcham, Surrey. Vervielfältigung oder Bekanntgabe an Dritte, in welcher Form auch, ohne schriftliche Genehmigung der Eigentümerin nicht gestattet.

Copyright owned by S.G.B. Group p.l.c. Mitcham, Surrey. Reproduction or disclosure to third parties in any form whatsoever is not allowed without the written consent of the proprietors. ©Copyright S.G.B. Group p.l.c. 1985

SGB GROUP p.l.c.
WILLOW LANE MITCHAM
SURREY Tel. 01-648 3400

SGB CIRCULAR FORMWORK SYSTEM

1.8m EDGE ANGLE DETAILS

Ref No. J19
Page No. 45
Date June 1985

GROUP RESEARCH AND DEVELOPMENT DIVISION

1.8 EDGE ANGLE

Code No:
Weight: 23 kgs

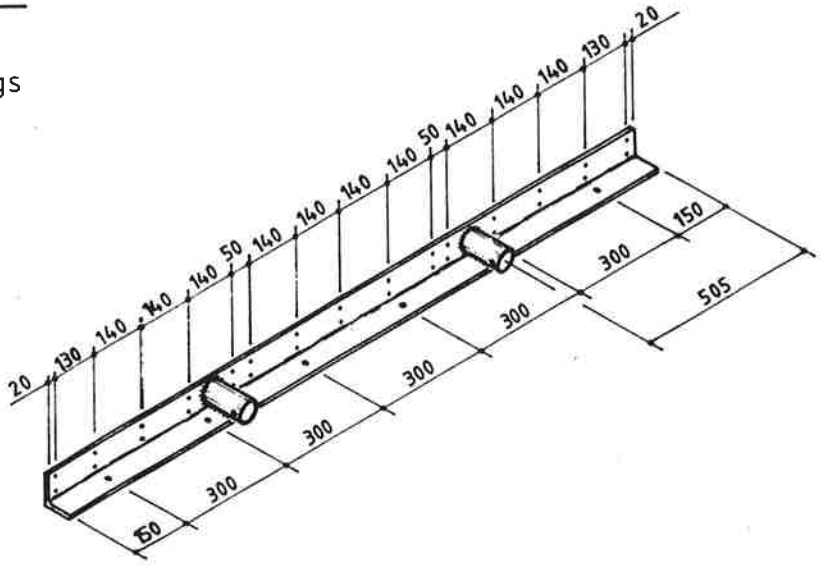

SCHEDULE OF NUTS AND BOLTS FOR 1.8m HIGH FORM		
DESCRIPTION	USED FOR:-	NUMBER REQUIRED
M10 x 60 90° COUNTERSUNK SQUARE HEXAGON (BOLT & NUT)	FIXING CONTINUOUS TIMBER BATTEN TO SOLDIER	4 PER SOLDIER
M10 x 40 90° COUNTERSUNK SQUARE HEXAGON (SCREW & NUT)	FIXING EDGE ANGLES TO PLYWOOD	15 PER ANGLE
M16 x 35 HEXAGON ROUND HEXAGON (BOLT & NUT)	JOINING TWO SHUTTER UNITS TOGETHER	6 PER SHUTTER JOINT
M10 x 70 HEXAGON ROUND HEXAGON (BOLT & NUT)	FIXING FORKARMS INTO SPIGOTS OF EDGE ANGLE	1 PER FORK ARM
M10 x 70 HEXAGON ROUND HEXAGON (BOLT & NUT)	FIXING TURNBUCKLES TO FORK ARMS	2 PER TURNBUCKLE
M16 x 75 HEXAGON ROUND HEXAGON (BOLT & NUT)	FIXING STIFFENING BRACES TO SOLDIERS	1 PER STIFFENING BRACE

Copyright vested by S.G.B. Group p.l.c. Mitcham, Surrey. Reproduction or disclosure to third parties in any form whatsoever is not allowed without the written consent of the proprietors. ©Copyright S.G.B. Group p.l.c. 1985

Copyright S.G.B. Group p.l.c. Mitcham, Surrey. Vervielfältigung oder Bekanntmachung an Dritte, in welcher Form auch, ohne schriftliche Genehmigung der Eigentümerin nicht gestattet.

Copyright de la propriété de S.G.B. Group p.l.c. Mitcham, Surrey. La reproduction ou la communication à des tiers, sous quelque forme que ce soit n'est permise qu'avec l'autorisation écrite du propriétaire.

Copyright bezit S.G.B. Group p.l.c. Vermenigvuldiging of mededeling aan derden in welke vorm dan ook, is zonder schriftelijke toestemming van eigenares niet geoorloofd.

Copyright owned by S.G.B. Group p.l.c. Mitcham, Surrey. Reproduction or disclosure to third parties in any form whatsoever is not allowed without the written consent of the proprietors ©Copyright S.G.B Group p.l.c 1985

Copyright ist Eigentum der S. . . Group p.l.c. Mitcham, Surrey. Vervielfältigung oder Bekanntgabe an Dritte, in welcher Form auch, ohne schriftliche Genehmigung der Eigentümerin nicht gestattet.

Copyright est la propriété de S.G.B. Group p.l.c. Mitcham, Surrey. La reproduction ou la communication à des tiers, sous quelque forme que ce soit n'est permise qu'avec l'autorisation écrite du propriétaire.

Copyright in bezit van S.G.B. Group p.l.c. Mitcham, Surrey. Vermenigvuldiging of mededeling aan derden in welke vorm dan ook, is zonder schriftelijke toestemming van eigeneres niet geoorloofd.

SGB GROUP p.l.c.
WILLOW LANE MITCHAM
SURREY Tel. 01-648 3400

SGB CIRCULAR FORMWORK SYSTEM

1.8m EDGE ANGLE DETAILS

Ref No. J19
Page No. 46
Date June 1985

GROUP RESEARCH AND DEVELOPMENT DIVISION

RECOMMENDED SETTING OUT FOR PLY FIXING SCREWS

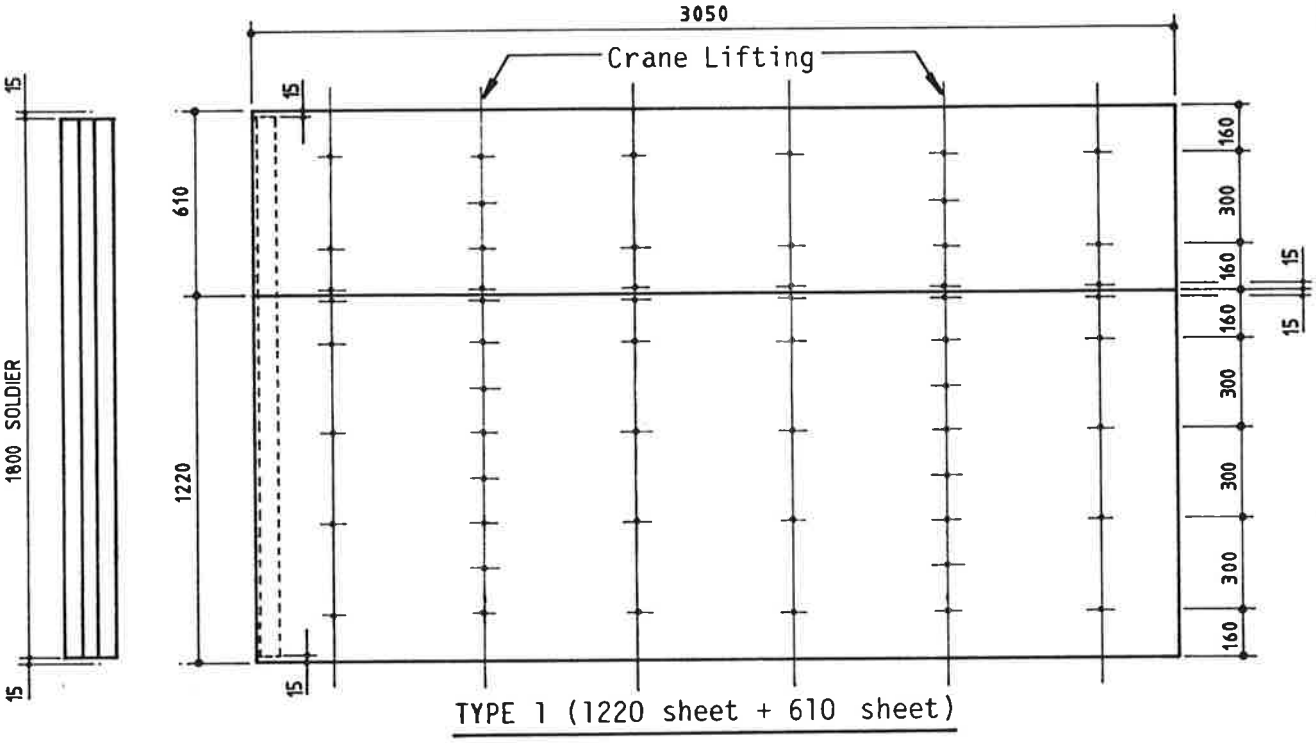

TYPE 1 (1220 sheet + 610 sheet)

Note screw spacings on soldiers used for crane lifting.

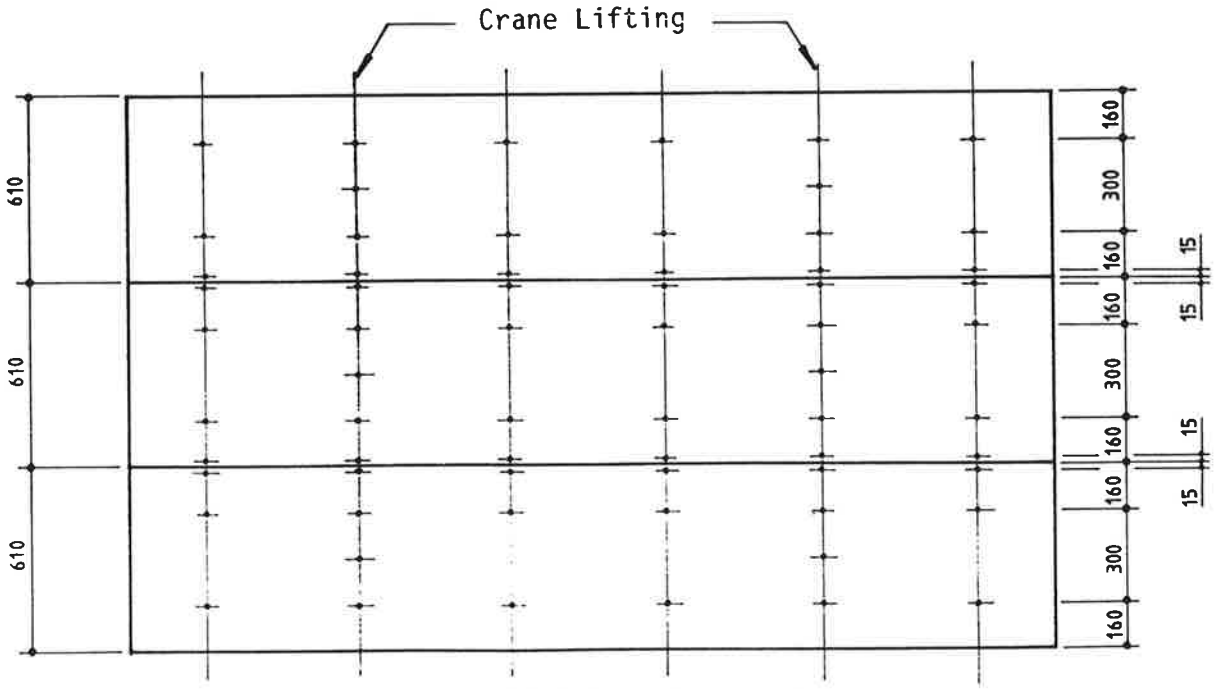

TYPE 3 (3 x 610 sheets)

NOTE: a. Refer to sheet 29 for screw details
b. See note A, sheet 23

SGB GROUP p.l.c.
WILLOW LANE MITCHAM
SURREY Tel. 01-648 3400

CLIMBING FORMWORK BRACKET

COMPONENTS

Ref No. J34
Page No. 1
Date. JUNE 1987

GROUP RESEARCH AND DEVELOPMENT DIVISION

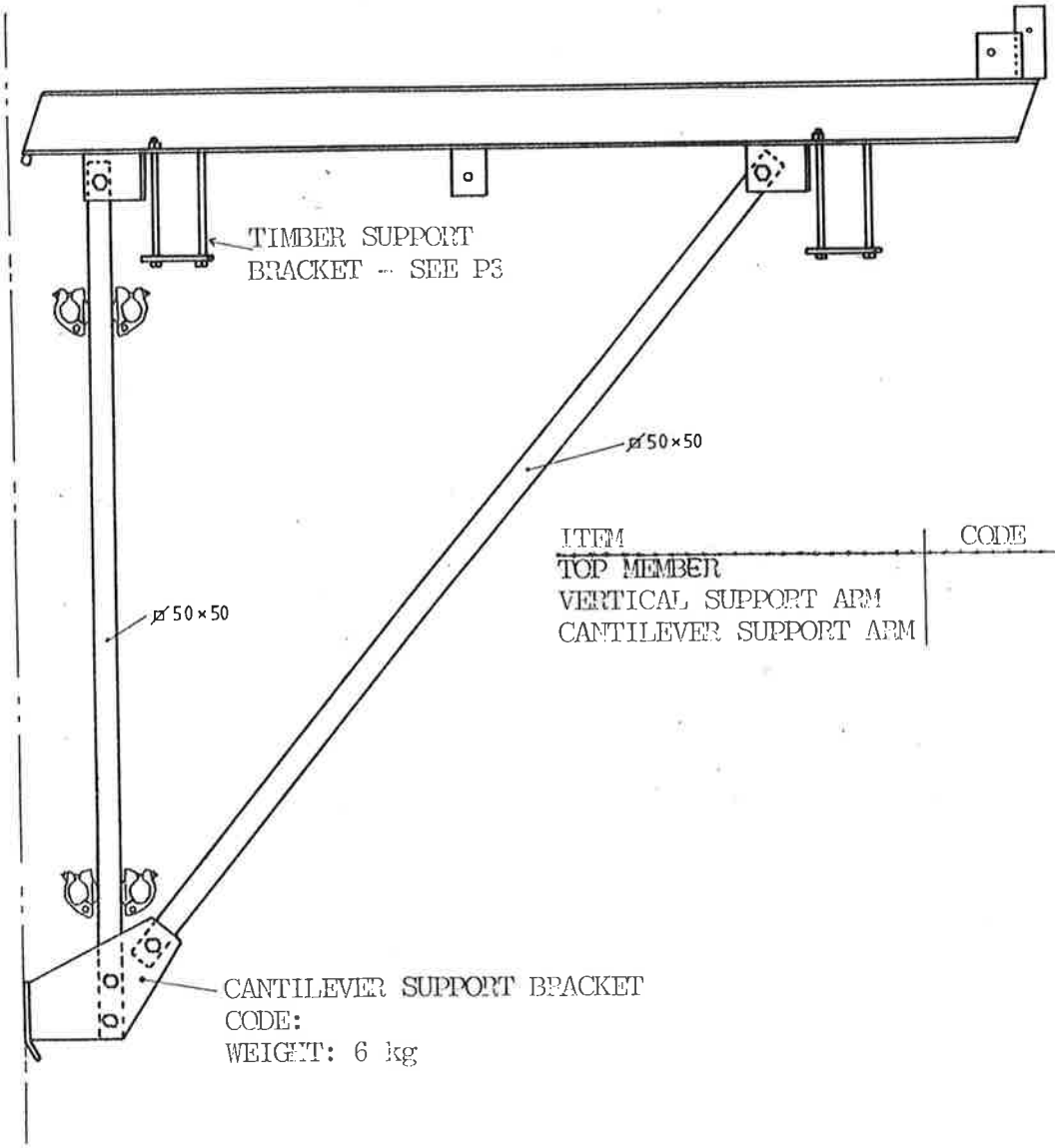

SECTION
127 × 76 RSJ

ITEM	CODE	WEIGHT
TOP MEMBER		33 kg
VERTICAL SUPPORT ARM		14 kg
CANTILEVER SUPPORT ARM		12 kg

SUSPENSION SHOE

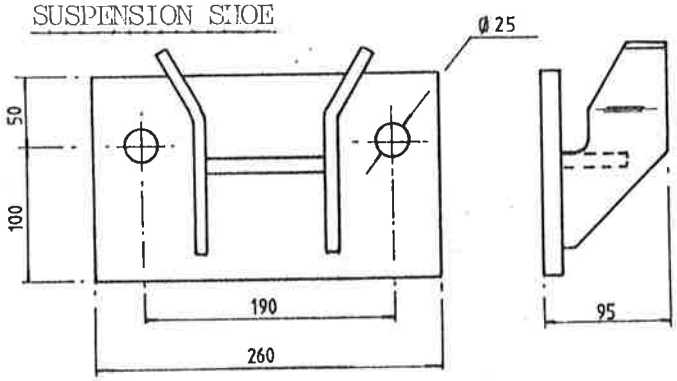

CODE:
WEIGHT: 6 kg

Copyright owned by S.G.B. Group p.l.c. Mitcham, Surrey. Reproduction or disclosure to third parties in any form whatsoever is not allowed without the written consent of the proprietors © Copyright S.G.B. Group p.l.c. 1987

Copyright est la propriété de S.G.B. Group p.l.c. Mitcham, Surrey. La reproduction ou la communication à des tiers, sous quelque forme que ce soit n'est permise qu'avec l'autorisation écrite du propriétaire.

Copyright ist Eigentum der S.G.B. Group p.l.c. Mitcham, Surrey. Vervielfältigung oder Bekanntgabe an Dritte, in welcher Form auch, ohne schriftliche Genehmigung der Eigentumerin nicht gestattt.

Copyright in bezit van S.G.B. Group p.l.c. Mitcham, Surrey. Vermenigvuldiging of mededeling aan derden in welke vorm dan ook, is zonder schriftelijke toestemming van eigenares niet geoorloofd.

SGB GROUP p.l.c.
WILLOW LANE MITCHAM
SURREY Tel. 01-648 3400

CLIMBING FORMWORK BRACKET

COMPONENTS

Ref No. J342/2
Page No.
Date. JUNE 1987
GROUP RESEARCH AND DEVELOPMENT DIVISION

Copyright in bezit van S G B Group p l c Mitcham, Surrey. Vermenigvuldiging of mededeling aan derden in welke vorm dan ook, is zonder schriftelijke toestemming van eigenaars niet geoorloofd.

Copyright est la propriété de S G B Group p l c Mitcham, Surrey. La reproduction ou la communication à des tiers, sous quelque forme que ce soit n'est permise qu'avec l'autorisation écrite du propriétaire

Copyright ist Eigentum der S.G.B Group p l c. Mitcham, Surrey. Vervielfältigung oder Bekanntgabe an Dritte, in welcher Form auch, ohne schriftliche Genehmigung der Eigentümerin nicht gestattet

Copyright owned by S G B Group p.l.c. Mitcham, Surrey. Reproduction or disclosure to third parties in any form whatsoever is not allowed without the written consent of the proprietors © Copyright S G B Group p.l.c. 1987

① Upper Crossmember (120×60RHS)

Code:
Weight: [2·7+(A−16)(13·3)] kg

(where A is % a length in mm. 2mm tolerance has been allowed for in dimension A & 1mm for dimension B.)

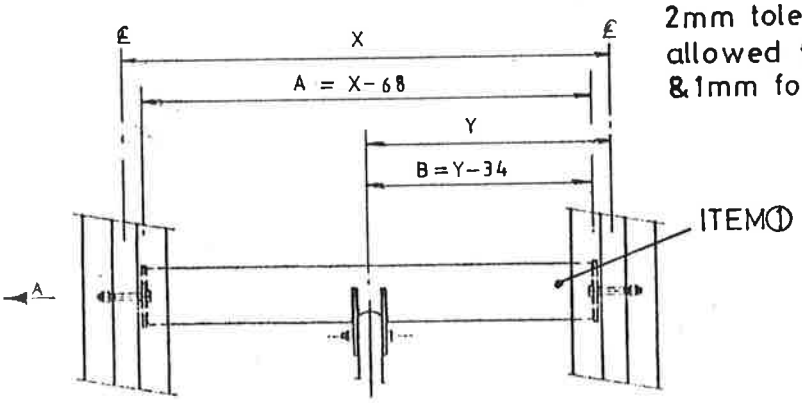

VIEW A

Upper Push/Pull Prop
Code:
Weight: (6·5+6·8Z) kg
see page 3

② Lower Crossmember (152×76RSC)

includes form height adjustment mechanism

Code:
Weight: [4·7+(A−16)(17·9)] kg
(see also notes on upper crossmember)

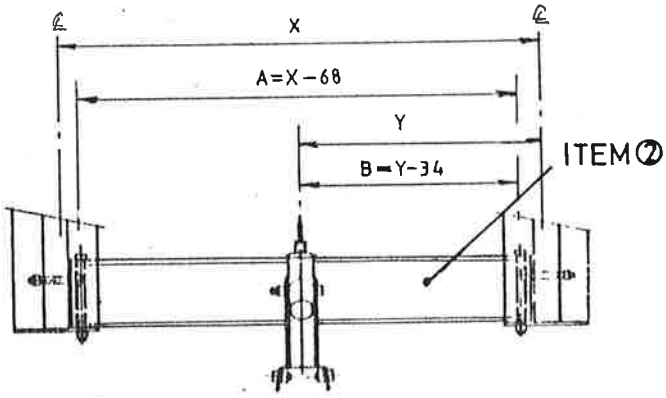

SECTION X-X

Note: Minimum Y (for both cross members) = 250mm

③ Slide Assembly

Code:
Weight: 13 kg

Standard Length Push/Pull Prop
see notes on page 3
Code:
Weight: 12·5 kg

SGB GROUP p.l.c.
WILLOW LANE MITCHAM
SURREY Tel. 01-648 3400

CLIMBING FORMWORK BRACKET

COMPONENTS

GROUP RESEARCH AND DEVELOPMENT DIVISION

Copyright in bezit van S.G.B. Group p.l.c. Mitcham, Surrey. Vermenigvuldiging of mededeling aan derden in welke vorm dan ook, is zonder schriftelijke toestemming van eigenares niet geoorloofd.

Copyright est la propriété de S.G.B. Group p.l.c. Mitcham, Surrey. La reproduction ou la communication à des tiers, sous quelque forme que ce soit n'est permise qu'avec l'autorisation écrite du propriétaire.

Copyright ist Eigentum der S.G.B. Group p.l.c. Mitcham, Surrey. Vervielfältigung oder Bekanntgabe an Dritte, in welcher Form auch, ohne schriftliche Genehmigung der Eigentumerin nicht gestattt.

SUSPENDED PLATFORM SUPPORT

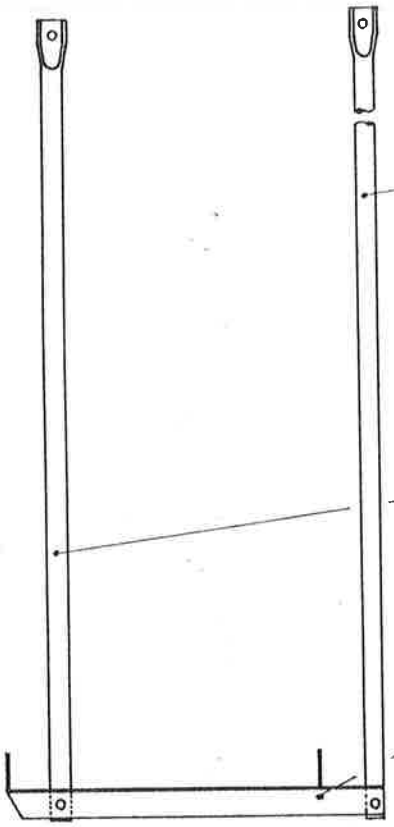

LONG DROP TUBE (Ø48.3)
CODE:
WEIGHT: 13 kg

SHORT DROP TUBE (Ø48.3)
CODE:
WEIGHT: 7 kg

PLATFORM BEARER
CODE:
WEIGHT: 4.5 kg

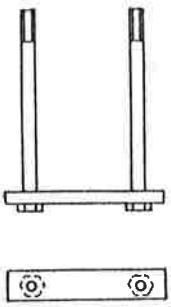

TIMBER SUPPORT BRACKET
Supplied complete with 2 no M12 nylok nuts
For use with 225 mm deep timbers only.
CODE:
WEIGHT: 1 kg

DIMENSIONING AND WEIGHT OF PUSH-PULL PROPS:

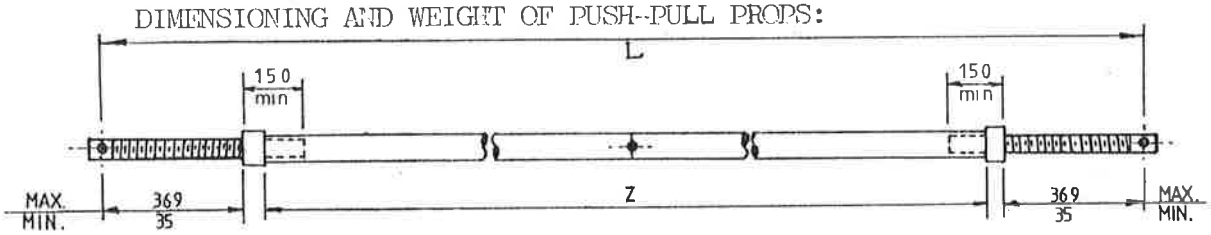

For STANDARD LENGTH (lower) push-pull prop, Z = 900 mm -- ensures dead length of 150mm for 70mm wallform.

For UPPER push-pull prop find L, from horizontal dimension of 1079mm and vertical dimension of [n(225)-61] where n = number of lightening holes BELOW top bolt on soldier/prop bracket connector, for finding weight, (page 2), Z = L -- 688, ensures 175 mm (approx) dead length.

Copyright owned by S.G.B. Group p.l.c. Mitcham, Surrey. Reproduction or disclosure to third parties in any form whatsoever is not allowed without the written consent of the proprietors © Copyright S.G.B. Group p.l.c. 1987

SGB GROUP p.l.c.
WILLOW LANE MITCHAM
SURREY Tel. 01-648 3400

CLIMBING FORMWORK BRACKET

GENERAL ARRANGEMENT

Ref No J34
Page No. 1
Date JUNE 1987

GROUP RESEARCH AND DEVELOPMENT DIVISION

For striking, the form is moved off the wall face by adjusting the lower prop. Inclined forms are obtained through tilting of the form on the M12 x 80 bolt, attaching the bracket to the form height adjustment mechanism in the lower crossmember.

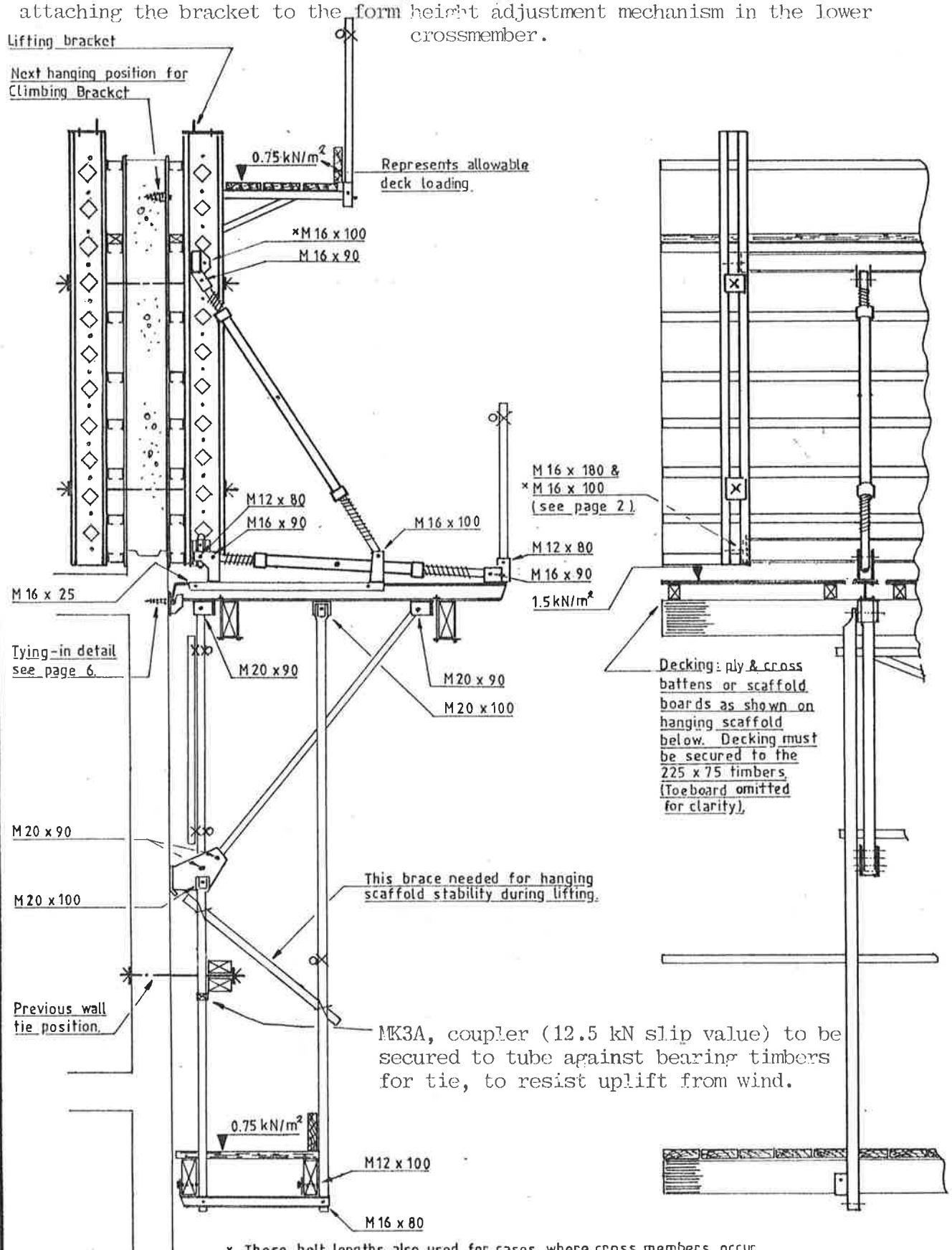

× These bolt lengths also used for cases where cross members occur on both sides of the same soldier (see page 8)

Copyright in bezit van S G B Group p l c Mitcham Surrey Vermenigvuldiging of mededeling aan derden in welke vorm dan ook, is zonder schriftelijke toestemming van eigenares niet geoorloofd.

Copyright est la propriété de S G B Group p l c Mitcham, Surrey. La reproduction ou la communication à des tiers, sous quelque forme que ce soit n'est permise qu'avec l'autorisation écrite du propriétaire.

Copyright ist Eigentum der S G B Group p l c Mitcham, Surrey. Vervielfältigung oder Bekanntgabe an Dritte, in welcher Form auch, ohne schriftliche Genehmigung der Eigentümerin nicht gestattet.

Copyright owned by S G B Group p l c Mitcham, Surrey. Reproduction or disclosure to third parties in any form whatsoever is not allowed without the written consent of the proprietors © Copyright S G B Group p l c 1987

SGB GROUP p.l.c.
WILLOW LANE MITCHAM
SURREY Tel. 01-648 3400

CLIMBING FORMWORK BRACKET

BOLT SCHEDULE

GROUP RESEARCH AND DEVELOPMENT DIVISION

ALL BOLTS AND NUT LISTED BELOW, TO BE BLACK BOLTS GRADE 4.6

ITEM	DESCRIPTION	QUANTITY
Upper Cross member to soldiers	M16 x 100 bolt + nylok nut	2*
Upper Push-Pull Prop: Top	M16 x 90 bolt + nylok nut	1
Bottom	M16 x 100 bolt + nylok nut	1
Lower Push-Pull prop	M16 x 90 bolt + nylok nut	2
Lower Cross member		
To soldiers : Vertically	M16 x 180 bolt + nylok nut	2
Horizontally	M16 x 100 bolt + nylok nut	2*
To Slide Assembly	M12 x 80 bolt + nylok nut	1
Slide Assembly	M16 x 25 set screws	4
	M16 Spring Washers + nut	4
Vertical Support Arm: Top	M20 x 90 bolt + nylok nut	1
Bottom	M20 x 90 bolt + nylok nut	1
(Also for short drop tube) -	M20 x 100 bolt + nylok nut	1
Cantilever Support Arm	M20 x 90 bolt + nylok nut	2
Suspended Platform		
Long Drop Tube (Top	M20 x 100 bolt + nylok nut	1
Platform Bearer	M16 x 80 bolt + nylok nut	2
For Timbers on Platform Bearers	M12 x 100 bolt + nut	2
For Handrail Post to Top Member	M12 x 80 bolt + nut	1
For Timber Support Brackets	Supplied complete with 2 No M12 nylok nuts	
Soldier Hop-Up Bracket	M16 x 90 bolt + nut	1
Soldier Lifting Bracket	M16 x 35 Set Screws + Nuts	4

*NOTE Those quantities assume that crossmemebers do not occur on opposite sides of the same soldier.
(see page 8)

Copyright in bezit van S G B Group p l c Mitcham Surrey Vermenigvuldiging of mededeling aan derden in welke vorm dan ook, is zonder schriftelijke toestemming van eigenaar niet geoorloofd.

Copyright est la propriete de S.G.B. Group p l c Mitcham, Surrey. La reproduction ou la communication a des tiers, sous quelque forme que ce soit n'est permise qu'avec l'autorisation écrite du propriétaire.

Copyright ist Eigentum der S G B Group p l c Mitcham, Surrey. Vervielfältigung oder Bekanntgabe an Dritte, in welcher Form auch, ohne schriftliche Genehmigung der Eigentumerin nicht gestattit.

Copyright owned by S.G.B. Group p.l.c. Mitcham, Surrey. Reproduction or disclosure to third parties in any form whatsoever is not allowed without the written consent of the proprietors ©Copyright S G B Group p.l.c. 1987

SGB GROUP p.l.c.
WILLOW LANE MITCHAM
SURREY Tel. 01-648 3400

CLIMBING FORMWORK BRACKET

GENERAL DIMENSIONS

Ref No. J34
Page No. 7
Date. JUNE 1987

GROUP RESEARCH AND DEVELOPMENT DIVISION

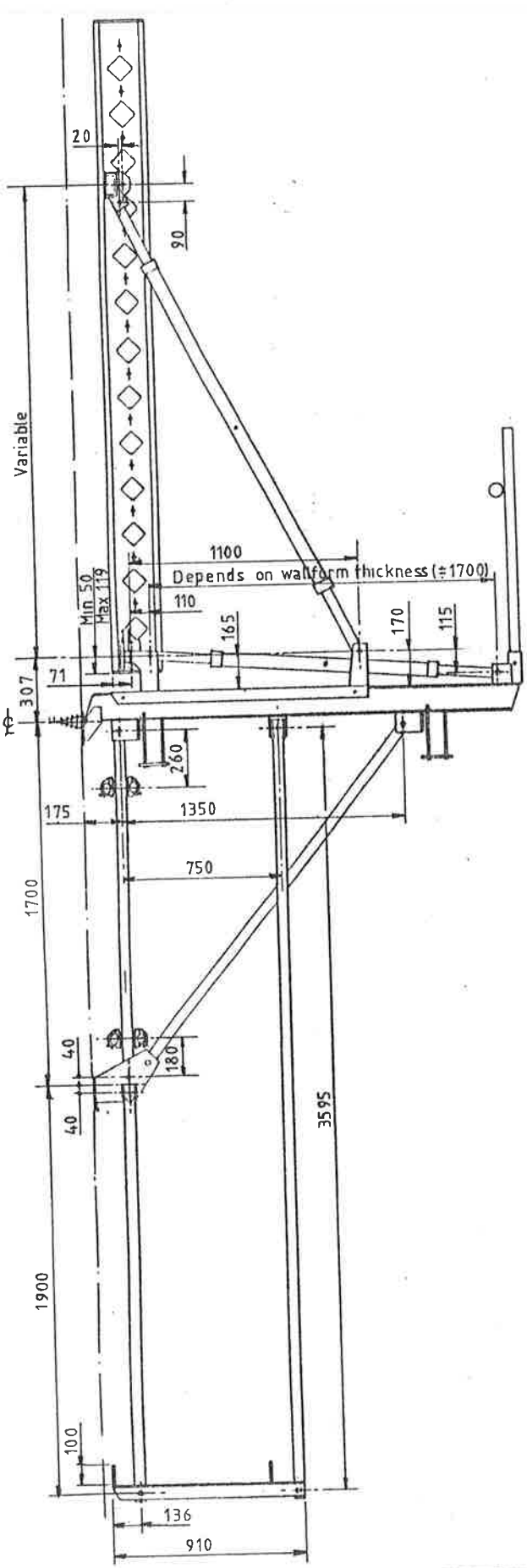

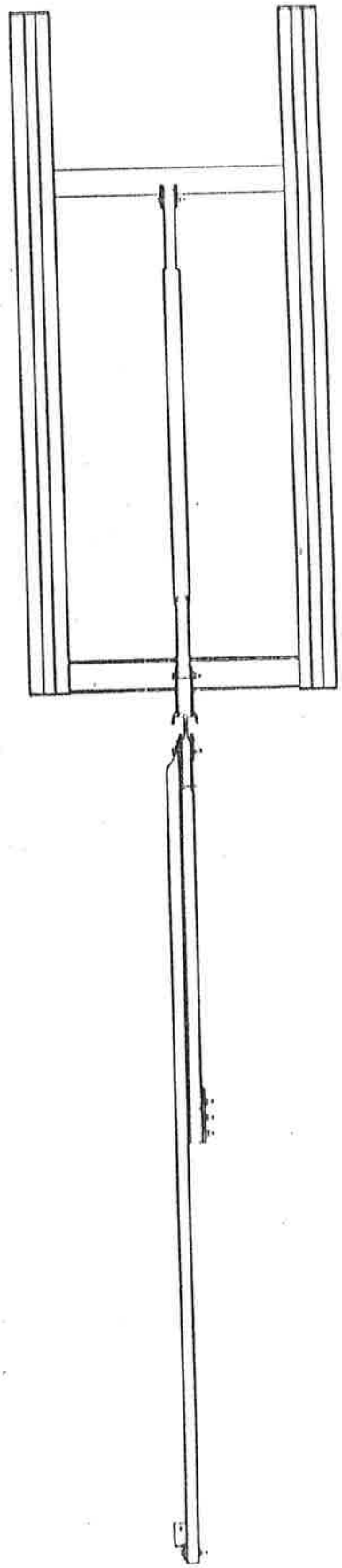

WALLFORM, DECKING AND CROSSTUBES OMITTED FOR CLARITY.

Copyright owned by S.G.B. Group p.l.c. Mitcham, Surrey. Reproduction or disclosure to third parties in any form whatsoever is not allowed without the written consent of the proprietors © Copyright S.G.B. Group p.l.c. 1987

Copyright est la propriété de S.G.B. Group p.l.c. Mitcham, Surrey. La reproduction ou la communication à des tiers, sous quelque forme que ce soit n'est permise qu'avec l'autorisation écrite du propriétaire.

Copyright ist Eigentum der S.G.B. Group p.l.c. Mitcham, Surrey. Vervielfältigung oder Bekanntgabe an Dritte, in welcher Form auch, ohne schriftliche Genehmigung der Eigentümerin nicht gestattt.

Copyright in bezit van S.G.B. Group p.l.c. Mitcham, Surrey. Vermenigvuldiging of mededeling aan derden in welke vorm dan ook, is zonder schriftelijke toestemming van eigenares niet geoorloofd.

CROSSMEMBERS ON BOTH SIDES OF THE SAME SOLDIER

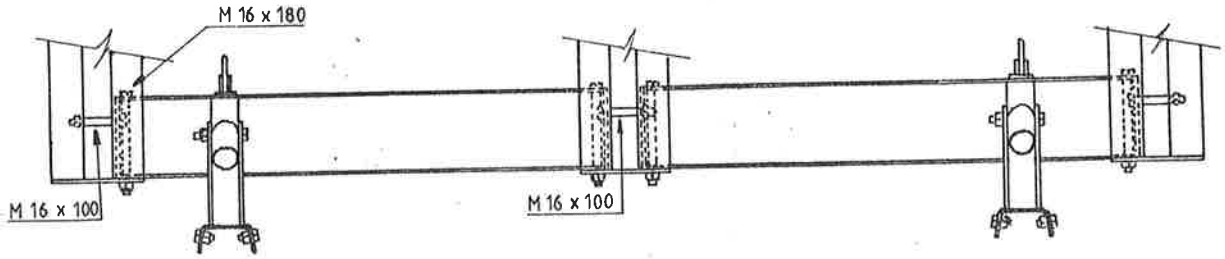

ELEVATION ON LOWER CROSSMEMBER

(Formwork omitted for clarity)

When adjusting the form height, great care must be taken to ensure that one side is not forced to such a height as to cause jamming. Sucessive small adjustments on alternate sides are recommended to prevent this happening.

ANGLED CROSSMEMBERS

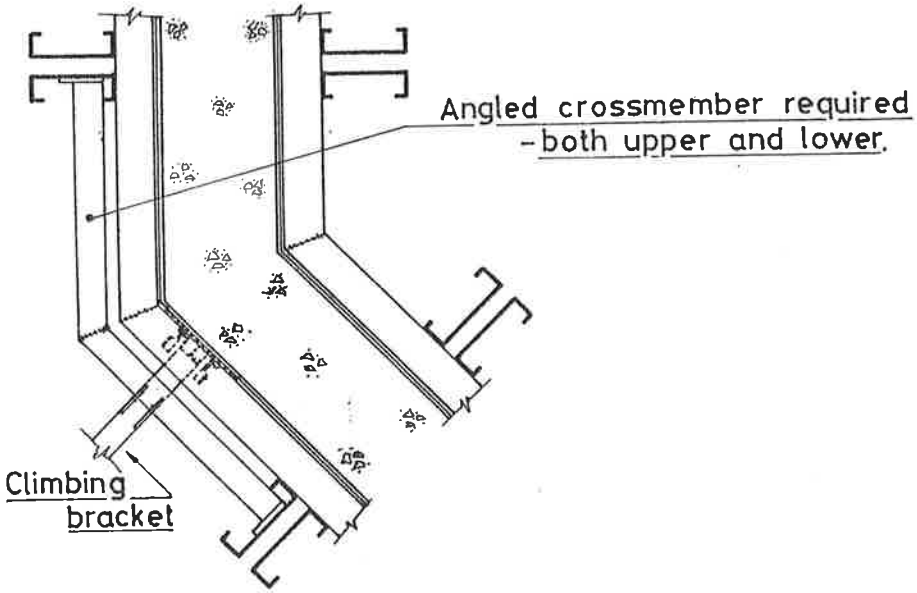

These are used on angled and circular wallforms and are manufactured to order.

Copyright in bezit van S.G.B. Group p.l.c. Mitcham, Surrey. Vermenigvuldiging of mededeling aan derden in welke vorm dan ook, is zonder schriftelijke toestemming van eigenaar niet geoorloofd.

Copyright est la propriete de S.G.B. Group p.l.c. Mitcham, Surrey. La reproduction ou la communication a des tiers, sous quelque forme que ce soit n'est permise qu'avec l'autorisation écrite du propriétaire.

Copyright ist Eigentum der S.G.B. Group p.l.c. Mitcham, Surrey. Vervielfältigung oder Bekanntgabe an Dritte, in welcher Form auch, ohne schriftliche Genehmigung der Eigentumerin nicht gestattet.

Copyright owned by S.G.B. Group p.l.c. Mitcham, Surrey. Reproduction or disclosure to third parties in any form whatsoever is not allowed without the written consent of the proprietors © Copyright S.G.B. Group p.l.c. 1987

SGB GROUP p.l.c.
WILLOW LANE MITCHAM
SURREY Tel. 01-648 3400

CLIMBING FORMWORK BRACKET

CIRCULAR FORMS

GROUP RESEARCH AND DEVELOPMENT DIVISION

For circular formwork, the upper and lower crossmembers must be angled to suit the radius of the forms. In the plan below (only one side of the wallform shown), it can be seen that the suspension shoe side plates must be angled to suit the right angled connection to the Clumbing Bracket. (For details on the fabrication of these 'Specials', see the relevant manufacturing drawing)

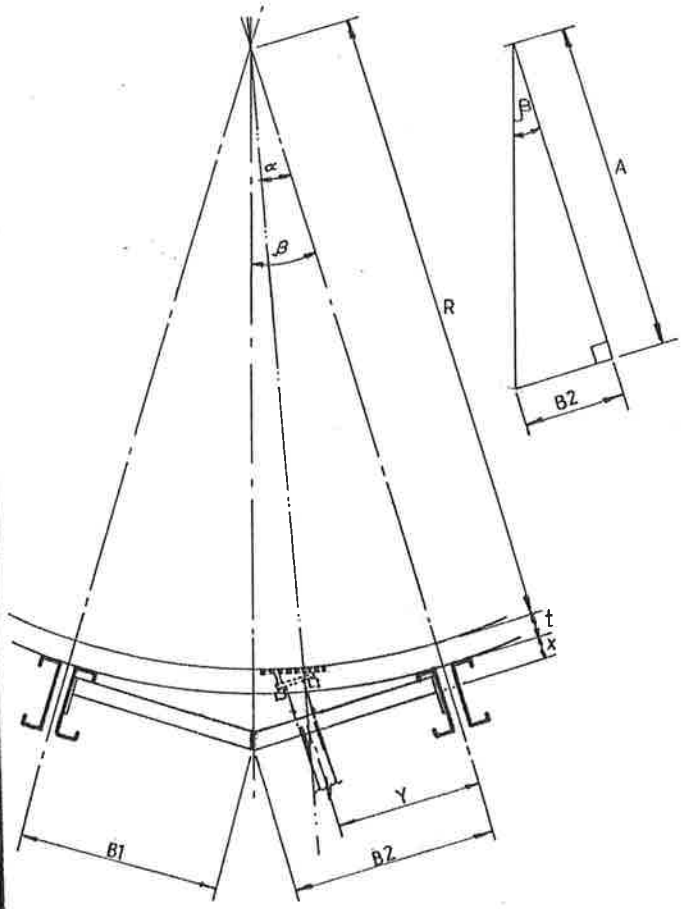

TO FIND LENGTH B2

R = Radius to outside face of wall
t = Thickness of wallform
x = for lower crossmember = 101 mm
for upper crossmember = 85 mm
A = [R + t + x]
and B2 = A tan β

TO FIND ANGLE OF SUSPENSION SHOE SIDE PLATES

1. Draw a line from the centre of the wall radius to the ℄ of the bracket connection on outside face of crossmember.
2. From $\alpha = \tan^{-1} Y/A$, find angle α
3. The angle of the backplate to the side plate is $(90° - \alpha)$.

Since the backplate of the suspension shoe will only be tangental to the wall at its ℄, the distance off the wall (p), of any point a distance q from the backplate ℄ is the solution to the equation: $p^2 + 2Rp - q^2 = 0$
(For standard width backplate, 260 mm Wide, q for the edge = 130 mm)

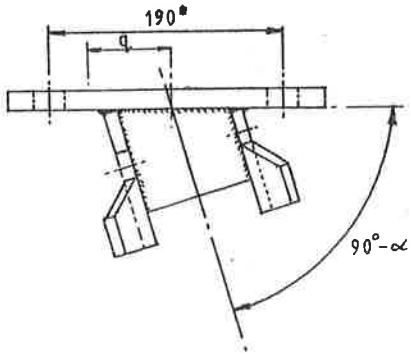

*If $(90° - \alpha)$ is less than 78°, the 190 mm dimension and the overall width of backplate must be increased to prevent fouling of the Anchor Bolt head. (Refer to manufacturing drawing, for details.

NOTE: A similar method of calculation may be used for inside crossmember.

Copyright in bezit van S.G.B. Group p.l.c. Mitcham, Surrey. Vermenigvuldiging of mededeling aan derden in welke vorm dan ook, is zonder schriftelijke toestemming van eigenaar niet geoorloofd.
Copyright est la propriété de S.G.B. Group p.l.c. Mitcham, Surrey. La reproduction ou la communication à des tiers, sous quelque forme que ce soit n'est permise qu'avec l'autorisation écrite du propriétaire.
Copyright ist Eigentum der S.G.B. Group p.l.c. Mitcham, Surrey. Vervielfältigung oder Bekanntgabe an Dritte, in welcher Form auch, ohne schriftliche Genehmigung der Eigentümerin nicht gestattet.
Copyright owned by S.G.B. Group p.l.c. Mitcham, Surrey. Reproduction or disclosure to third parties in any form whatsoever is not allowed without the written consent of the proprietors © Copyright S.G.B. Group p.l.c. 1987

SGB GROUP p.l.c.
WILLOW LANE MITCHAM
SURREY Tel. 01-648 3400

CLIMBING FORMWORK BRACKET

CORNER DETAIL

Ref No.
Page No. 10
Date JUNE 1987
GROUP RESEARCH AND DEVELOPMENT DIVISION

1. Only one side of wallform shown in each case.
2. Formwork and decking (partly in case 1) have been omitted for clarity.

CASE 1

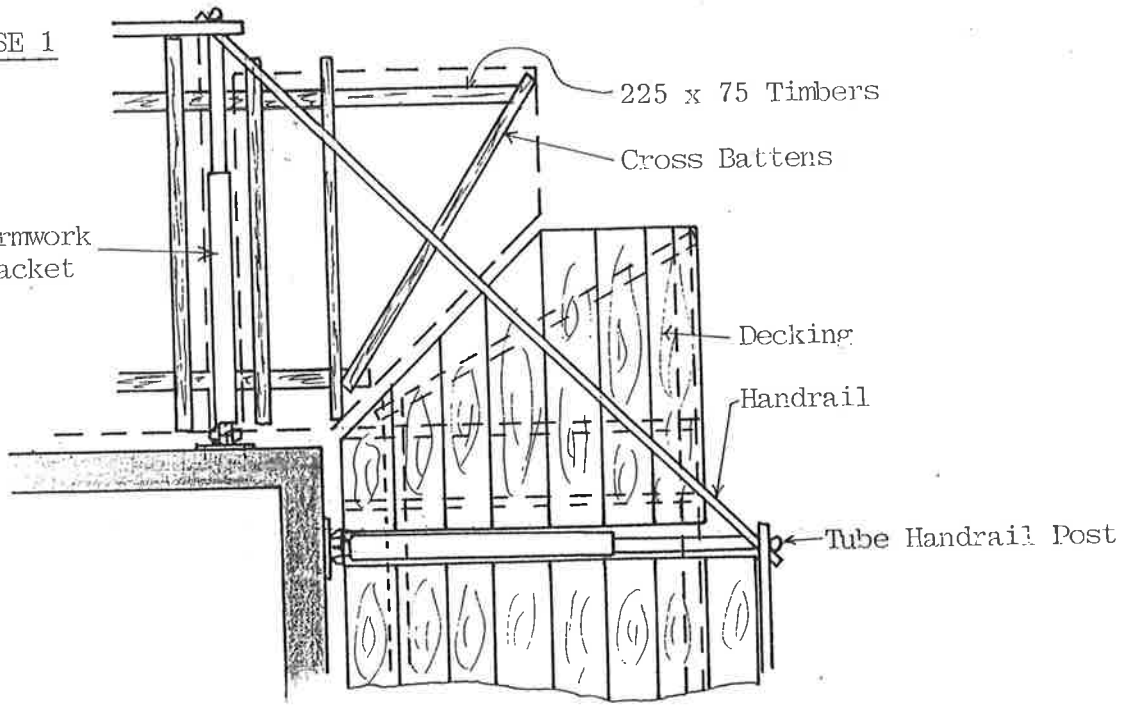

In cases where corner access width is important, Case 2 is recommended.

CASE 2

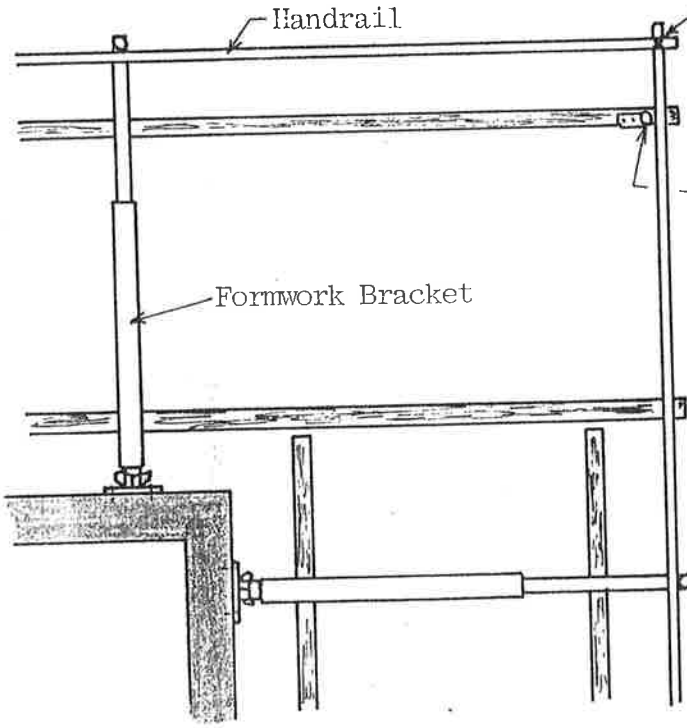

If the handrails are at the same level, this joint may be made with a 'Lapping' Tube.

Guard Post Bracket. Secured with 2 No. M10 x 60 square head coach screws. c/w washers. (code: D14/1100)

NOTE: The cantilevered, 225 x 75 mm timbers must have at least 2 supports and be of adequate strength to carry the applied loading.

Copyright in bezit van S.G.B. Group p.l.c. Mitcham, Surrey. Vermenigvuldiging of mededeling aan derden in welke vorm dan ook, is zonder schriftelijke toestemming van eigenaar niet geoorloofd.
Copyright est la propriété de S.G.B. Group p.l.c. Mitcham, Surrey. La reproduction ou la communication à des tiers, sous quelque forme que ce soit n'est permise qu'avec l'autorisation écrite du propriétaire.
Copyright ist Eigentum der S.G.B. Group p.l.c. Mitcham, Surrey. Vervielfältigung oder Bekanntgabe an Dritte, in welcher Form auch, ohne schriftliche Genehmigung der Eigentümerin nicht gestattet.
Copyright owned by S.G.B. Group p.l.c. Mitcham, Surrey. Reproduction or disclosure to third parties in any form whatsoever is not allowed without the written consent of the proprietors © Copyright S.G.B. Group p.l.c. 1987

MAXIMUM ALLOWABLE REACTIONS

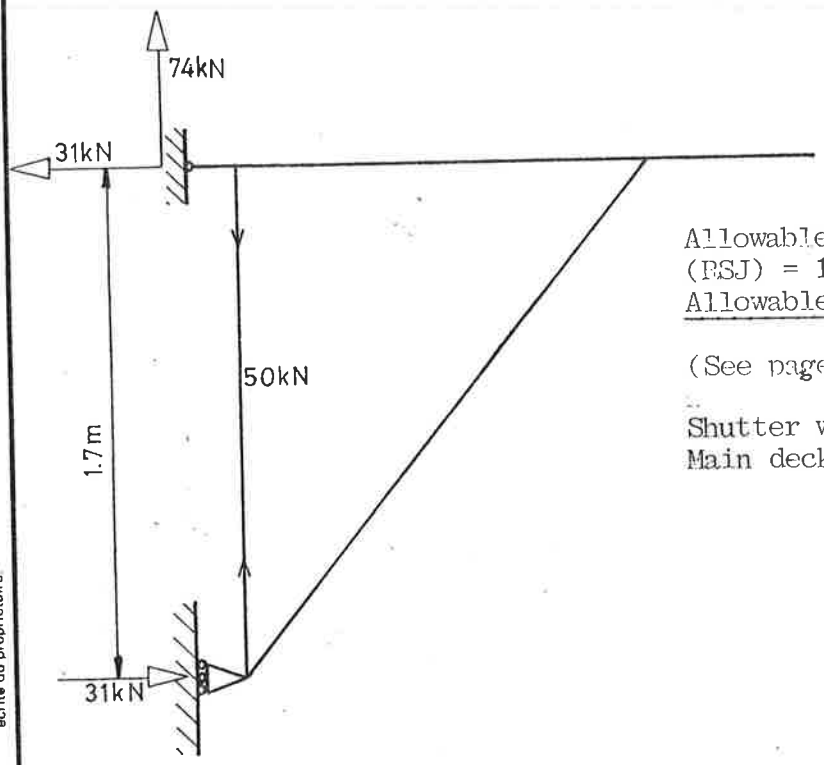

Allowable Bending Moment in top beam (RSJ) = 10.8 kNm

Allowable Reactions

(See page 12 for diagram)

Shutter weight (P1) = 17.5 kN
Main deck reactions (P4 & P6) = 6.2 kN

LOADS TO BE CONSIDERED

There are two cases to be considered, one of which will give the most unfavourable reactions:-

CASE A With the shutter away from the wall, the lower prop at minimum extension, no access loading and full wind loading (see page 12).

CASE B With the shutter against the kicker, (without the other side erected) with working wind loading and all access platforms loaded (see Page 12).

WORKING WIND FORCE (BS5975 : 42.1.3.1)
The maximum wind speed during which working operations take place and the access platforms are loaded, is limited to that of a wind force of 6 on the Beaufort Scale. This corresponds to a design wind speed, Vs, of 18m/s and gives a dynamic wind pressure, q, equal to 200 N/m^2. This is used in Case B with the same factors applied as in Case A. For the method in assessing these factos and their application see Page 13.

UPLIFT

The uplift caused by wind blowing up under the bracket is resisted by tying into the previous position, as shown on page 4.

Copyright in bezit van S G B Group p.l.c. Mitcham, Surrey. Vermenigvuldiging of mededeling aan derden in welke vorm dan ook, is zonder schriftelijke toestemming van eigenaars niet geoorloofd.

Copyright est la propriété de S.G.B. Group p.l.c. Mitcham, Surrey. La reproduction ou la communication à des tiers, sous quelque forme que ce soit n'est permise qu'avec l'autorisation écrite du propriétaire.

Copyright ist Eigentum der S G B Group p.l.c. Mitcham, Surrey. Vervielfältigung oder Bekanntgabe an Dritte, in welcher Form auch, ohne schriftliche Genehmigung der Eigentümerin nicht gestattet.

Copyright owned by S.G.B. Group p.l.c. Mitcham, Surrey. Reproduction or disclosure to third parties in any form whatsoever is not allowed without the written consent of the proprietors ©Copyright S G B Group p.l.c. 1987

SGB GROUP p.l.c.
WILLOW LANE MITCHAM
SURREY Tel. 01-648 3400

CLIMBING FORMWORK BRACKET
LOADS TO BE CONSIDERED
GUIDE TO DESIGNERS

GROUP RESEARCH AND DEVELOPMENT DIVISION

Copyright in bezit van S.G.B. Group p.l.c. Mitcham, Surrey. Vermenigvuldiging of mededeling aan derden in welke vorm dan ook, is zonder schriftelijke toestemming van eigenaars niet geoorloofd.

Copyright est la propriété de S.G.B. Group p.l.c. Mitcham, Surrey. La reproduction ou la communication à des tiers, sous quelque forme que ce soit n'est permise qu'avec l'autorisation écrite du propriétaire.

Copyright ist Eigentum der S.G.B. Group p.l.c. Mitcham, Surrey. Vervielfältigung oder Bekanntgabe an Dritte, in welcher Form auch, ohne schriftliche Genehmigung der Eigentümerin nicht gestattet.

CASE A

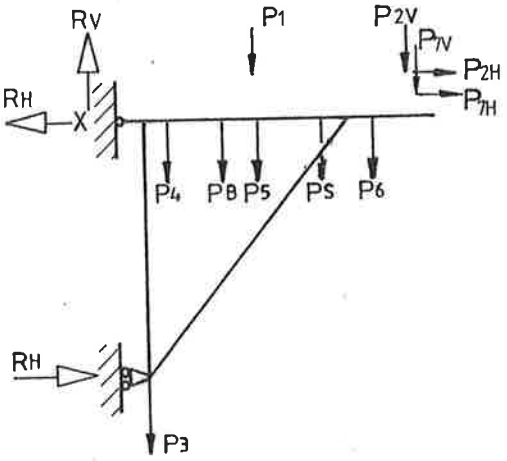

CASE B

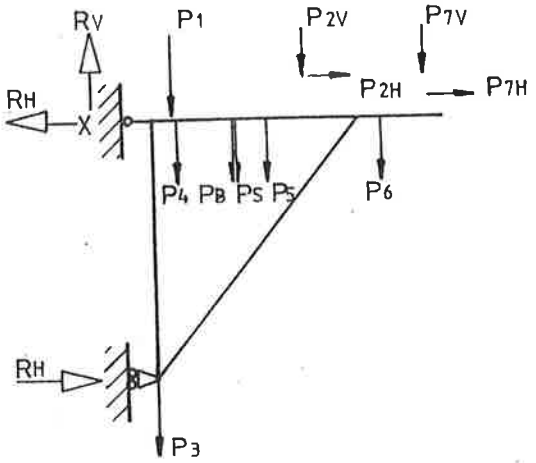

NOTE: a) Lever arms (1A) listed are for moments about point X.
b) t = Wallform thickness (shutter or ply + walings)

LOAD	CASE A - DEADLOADS+FULLWIND	1A(mm)	CASE B - DEAD+LIVELOADS+WORKINGWIND	1A(mm)
P1	Shutter weight	921	Case A+Hop-Up Live Load (.75 kN/m²)	t+ 181
*P2V	Slide assembly prop -	1920	As Case A	t+1171
*P2H	Vertical&Horizontal reaction	307		307
P3	Hanging Scaffold Reactions	175	Case A + Liveload (0.75 kN/m²)	175
P5		925		925
P4	Main Deck Reactions	333	Case A + Liveload (1.5 kN/m²)	333
P6		1683		1683
*P7V	Lower Prop -	1985	As Case A	1985
*P7H	Vertical&Horizontal reaction	192		192
PS	Weight of Slide Assembly (13kg)	1343	As Case A	712
PB	Weight of Bracket (65 kg)	710	As Case A	710

NOTES:

1. Case A As per BS5975:43.3.1, the allowable working stresses may be exceeded by 25% in cases where an increase in stress is solely due to wind forces (and the section is otherwise adequate).

*For Case A - $P_{2V} = 0.8P_{2V}$, $P_{2H} = 0.8P_{2H}$, $P_{7V} = 0.8P_{7V}$ & $P_{7H} = 0.8P_{7H}$

2. The dead weight of the push/pull props may be assumed to be allowed for in the % additions to actual loads for the ancillaries.

Copyright owned by S.G.B. Group p.l.c. Mitcham, Surrey. Reproduction or disclosure to third parties in any form whatsoever is not allowed without the written consent of the proprietors © Copyright S.G.B. Group p.l.c. 1987

1. TO FIND DYNAMIC WIND PRESSURE, q - refer to CP3:ChV:Pt2:72

CASE A

Design wind speed, $Vs = S_1S_2S_3V$, where V = Basic windspeed in m/s from figure 1 of the above code.
Generally, $S_1 = 1.0$ and $S_3 = 0.77$, the value for S_2 depends on dimensions, height and topography; refer to Table 3 in the above code.
=> $Vs = (0.77)\ S_2V$
and $q = 0.613\ (Vs)^2$

CASE B

As noted on Page 11, $q = 200\ N/m^2$

2. WIND FORCE

$F = Cf\ q\ Ae$
Where Cf = force coefficient = 2 (for worst case)
Ae = effective frontal area to wind
=> $F = 2qAe$
For the load per metre run over the height of any shutter take the effective length l in metres, per climbing bracket:-
=> $w\ (N/m) = 2ql$

CASE A

$W = 2[0.613\ (0.77\ S_2V)^2]l$
$W = \underline{0.73\ S_2^2V^2l}\ N/m$ (V in m/s)

CASE B

$W = 2(200)l$
$W = \underline{400l}\ N/m$

Copyright in bezit van S G B Group p.l.c. Mitcham, Surrey. Vermenigvuldiging of mededeling aan derden in welke vorm dan ook, is zonder schriftelijke toestemming van eigenaar niet geoorloofd.

Copyright est la propriété de S.G.B. Group p.l.c. Mitcham, Surrey. La reproduction ou la communication à des tiers, sous quelque forme que ce soit n'est permise qu'avec l'autorisation écrite du propriétaire.

Copyright ist Eigentum der S.G.B. Group p.l.c. Mitcham, Surrey. Vervielfältigung oder Bekanntgabe an Dritte, in welcher Form auch, ohne schriftliche Genehmigung der Eigentümerin nicht gestattet.

Copyright owned by S.G.B. Group p.l.c. Mitcham, Surrey. Reproduction or disclosure to third parties in any form whatsoever is not allowed without the written consent of the proprietors © Copyright S.G.B. Group p.l.c. 1987

Taking a typical 6 m long by 3.15 m high shutter, with 2 climbing brackets with a wallform of ply and steel walings.
(A) represents Case A and (B) Case B as shown on Page 12.

P1:- SHUTTER WEIGHT

Hop-ups, handrail, decking, toeboard, soldiers, crossmembers, walings, ply plus 5% for accessories = 1344 kg.
Since 2 brackets/panel => P1(A) = 672 kg => P1(A) = 6.59 kN
Extra load for access = 0.75 x 3 x 0.675 = 1.52 kN
=> P1(B) = 8.11 kN

P4 & P6 :- MAIN DECK REACTIONS

Assume reactions are equal, width/reaction = 975 mm. Taking a timber density of 600 kg/m^3, weight of decking, toeboard, cross battens, timber supporting bracket and 225 x 75 mm bearer
= 129 kgs => P4 & P6 (A) = 1.27 kN
Extra load for access = 1.5 x 3 x 0.975 = 4.39 kN
=> P4 & P6 (B) = 5.66 kN

P3 & P5 :- HANGING SCAFFOLD REACTIONS

Width/reaction = 455 mm and with an additional 10% on the weight of all scaffold tube (4.4 kg/m) to allow for fittings. P3 and P5, weight of decking 225 x 75 mm bearer and platform bearer.
= 63.37 kg.
P3, drop tube and lacing and bracking tubes = 68 kg
=> P3 (A) = 131.37 kg => P3 (A) = 1.29 kN
P5, drop tube and lacing, bracing and handrail tubes and toeboard
= 47.27 kg => P5 (A) = 110.64 kg => P5 (A) = 1.09 kN
Extra load for access = 0.75 x 3 x 0.455 = 1.02 kN
=> P3 (B) = 2.31 kN and P5 (B) = 2.11 kN

CASE A - FULL WIND LOAD

From Page 13, $W = 0.73 S_2{}^2 V^2 l$ N/m
l = 3 m, S_2 = 0.97 (class 3B, 30 m above ground), V = 48 m/s
=> W = 0.73 x $(0.97)^2$ x $(48)^2$ x 3 = 4747.6 N/m
=> load/mm = W = 4.75 N/mm over height of shutter.

Copyright in bezit van S.G.B. Group p.l.c. Mitcham, Surrey. Vermenigvuldiging of mededeling aan derden in welke vorm dan ook, is zonder schriftelijke toestemming van eigenares niet geoorloofd.
Copyright est la propriété de S.G.B. Group p.l.c. Mitcham, Surrey. La reproduction ou la communication à des tiers, sous quelque forme que ce soit n'est permise qu'avec l'autorisation écrite du propriétaire.
Copyright ist Eigentum der S.G.B. Group p.l.c. Mitcham, Surrey. Vervielfältigung oder Bekanntgabe an Dritte, in welcher Form auch, ohne schriftliche Genehmigung der Eigentumerin nicht gestattet.
Copyright owned by S.G.B. Group p.l.c. Mitcham, Surrey. Reproduction or disclosure to third parties in any form whatsoever is not allowed without the written consent of the proprietors © Copyright S.G.B. Group p.l.c. 1987

Copyright in bezit van S G B Group p l c Mitcham Surrey Vermenigvuldiging of mededeling aan derden in welke vorm dan ook, is zonder schriftelijke toestemming van eigenares niet geoorloofd.

Copyright est la propriete de S G B Group p l c Mitcham. Surrey La reproduction ou la communication à des tiers, sous quelque forme que ce soit n'est permise qu'avec l'autorisation écrite du propriétaire.

Copyright ist Eigentum der S G B Group p.l.c. Mitcham, Surrey. Vervielfältigung oder Bekanntgabe an Dritte, in welcher Form auch, ohne schriftliche Genehmigung der Eigentumerin nicht gestattit.

P7v, P7H, P2v & P2H :- WIND REACTIONS

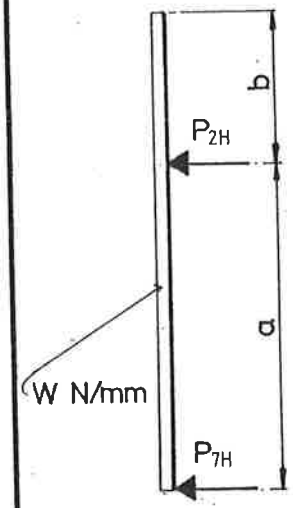

Assume shutter to bracket (P7H) and to prop (P2H) connections are simply supported.
a + b = 3150 mm (shutter height)
a = 2138 mm, b = 1012 mm, W = 4.75 N/mm

$P7H = \frac{W}{2a}(a^2 - b^2) = 3940$ N => P7H (A) = 3.94 kN

P2H = W(a + b) – P1H = 11022 N => P2H (A) = 11 kN

P7v = (0.11) P7H (the 0.11 being a constant factor) => P7v (A) = 0.43 kN

$P2v = \frac{(a)}{(1079)} P2H = \frac{(2138)}{(1079)} 11$ => P2v (A) = 21.8 kN

(The 1079 mm dimension being a constant horizontal dimension) Reducing, above loads as per note on Page 12.

0.8 x 3.94 = 3.15 kN = P7H (A)

0.8 x 0.43 = 0.34 kN = P7v (A)

0.8 x 11.00 = 8.8 kN = P2H (A)

0.8 x 21.80 = 17.44 kN = P2v (A)

CASE A

LOAD	VALUE (kN)	la (m)	MOMENTS
P1	6.59	0.92	6.06
P2v	17.44	1.92	33.48
P2H	8.80	0.31	2.73
P3	1.29	0.18	0.23
P5	1.09	0.93	1.01
P4	1.27	0.33	0.42
P6	1.27	1.68	2.13
P7v	0.34	1.99	0.68
P7H	3.15	0.19	0.60
Ps	0.13	1.34	0.17
Pb	0.64	0.71	0.45

1. Check Vertical reaction => Sum of vertical loads = Wv = 30.06 kN which is less than the 74 kN allowable => ok.
2. Check Horizontal reaction => Sum of moments = 47.96 kNm => 47.96 = 1.7 R => R = 28.21 kN which is less than the 31 kN allowable => ok
3. Find vertical reaction in Cantilever Support Arm, Vc, Vc = 1.26 R = 1.26 (28.21) = 35.55 kN
4. Find Vertical reaction in Vertical Support Arm, Vv, Vv = P3 + Vc = 1.29 + 35.55 = 36.84 kN.

Copyright owned by S.G.B. Group p.l.c. Mitcham. Surrey. Reproduction or disclosure to third parties in any form whatsoever is not allowed without the written consent of the proprietors © Copyright S G B Group p.l.c. 1987

Copyright in bezit van S.G.B. Group p.l.c. Mitcham, Surrey. Vermenigvuldiging of mededeling aan derden in welke vorm dan ook, is zonder schriftelijke toestemming van eigenaars niet geoorloofd.

Copyright est la propriété de S.G.B. Group p.l.c. Mitcham, Surrey. La reproduction ou la communication à des tiers, sous quelque forme que ce soit n'est permise qu'avec l'autorisation écrite du propriétaire.

Copyright ist Eigentum der S.G.B. Group p.l.c. Mitcham, Surrey. Vervielfältigung oder Bekanntgabe an Dritte, in welcher Form auch, ohne schriftliche Genehmigung der Eigentümerin nicht gestattet.

5. Check Bending Moment in Top Beam:

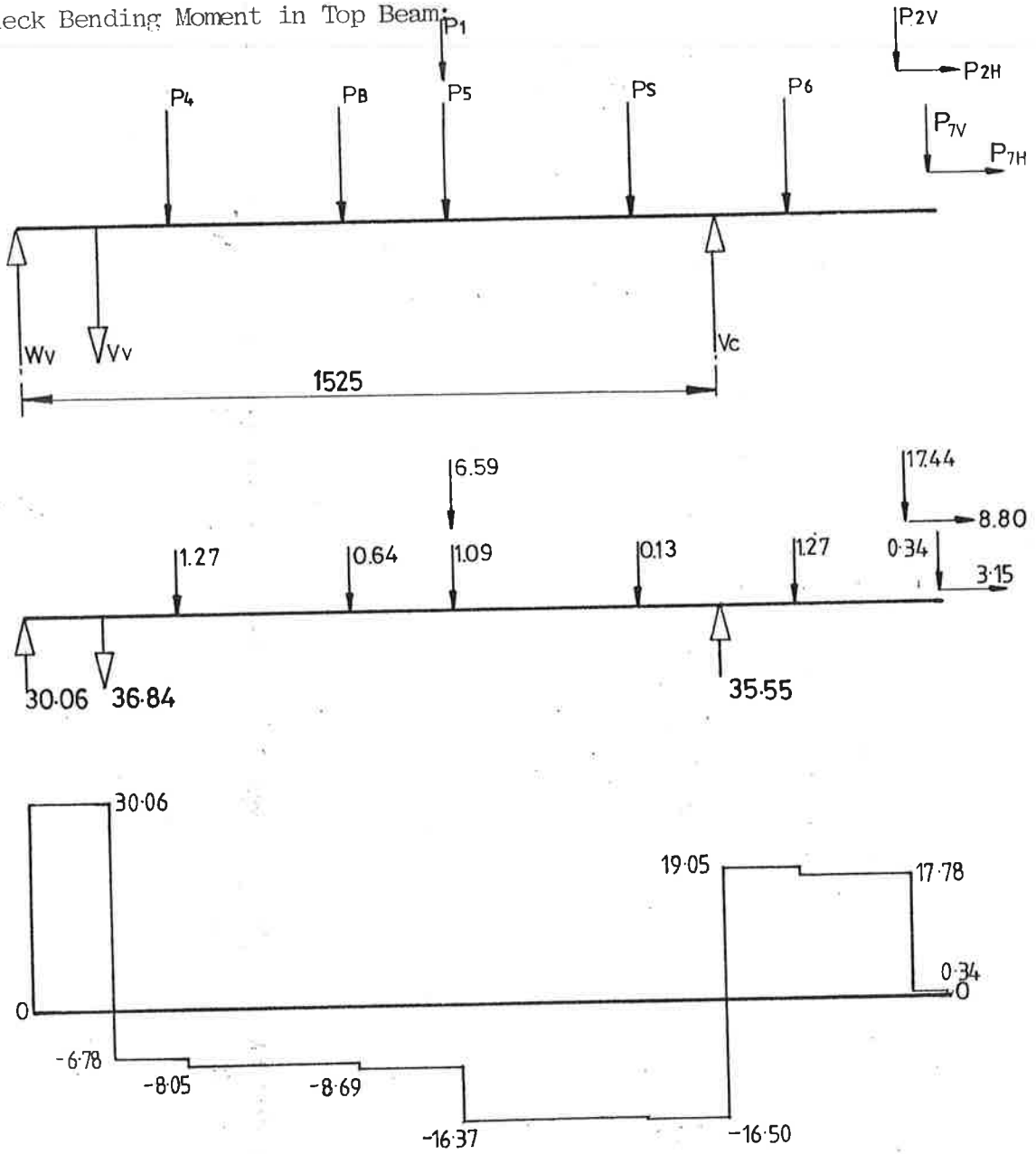

SHEAR FORCE DIAGRAM

The Maximum Bending Moment occurs at a zero shearing force position:-
Moments about Vv = 30.06 x 0.175 = 5.26 kNm
Moments about Vc = 1.27 (1.68 - 1.53) + 17.44 (1.92 - 1.53)
+ 8.8 x 0.31 + 0.34 (1.99 - 1.53) + 3.15 x 0.19
= 10.48 kNm

This is less than the Allowable Bending Moment of 10.8 kNm.

Copyright owned by S.G.B. Group p.l.c. Mitcham, Surrey. Reproduction or disclosure to third parties in any form whatsoever is not allowed without the written consent of the proprietors (©Copyright S.G.B. Group p.l.c. 1987

Copyright in bezit van S.G.B. Group p.l.c. Mitcham, Surrey. Vermenigvuldiging of mededeling aan derden in welke vorm dan ook, is zonder schriftelijke toestemming van eigenaar niet geoorloofd.

Copyright est la propriété de S.G.B. Group p.l.c. Mitcham, Surrey. La reproduction ou la communication à des tiers, sous quelque forme que ce soit n'est permise qu'avec l'autorisation écrite du propriétaire.

Copyright ist Eigentum der S.G.B. Group p.l.c. Mitcham, Surrey. Vervielfältigung oder Bekanntgabe an Dritte, in welcher Form auch, ohne schriftliche Genehmigung der Eigentümerin nicht gestattet.

CASE B

From Page 14 :- P1 (B) = 8.11 kN, P4 & P6 (B) = 5.66 kN
P3 (B) = 2.31 kN & P5 (B) = 2.11 kN

Wallform thickness, t = 100 + 19 = 119 mm

WORKING WIND

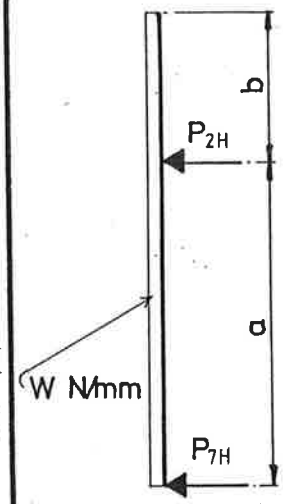

a = 2138, b = 1012, l = 3m
From Page 13, W = 4001 N/m
=> W = 1.2 N/mm

$P7H = \frac{W}{2a}(a^2 - b^2) = 995N$ => P7H = 1.0 kN

P2H = W (a + b) - P7H = 2785 N => P2H = 2.79 kN

$P2v = \frac{(a)}{(1079)} P2H$ => P2v = 5.53 kN

P7v :- To find P7v using ratios, the vertical dimension = 115 mm (constant) and the horizontal dimension is the difference between the lever arms for P7v and P1,
= 1985 - (t + 181) = 1685 mm

$\Rightarrow P7v = \frac{(115)}{(1685)} P7H$ => P7v = 0.07 kN

LOAD	VALUE (kN)	1a (m)	MOMENTS
P1	8.11	0.30	2.43
P2v	5.53	1.29	7.13
P2H	2.79	0.31	0.86
P3	2.31	0.18	0.42
P5	2.11	0.93	1.96
P4	5.66	0.33	1.87
P6	5.66	1.68	9.51
P7v	0.07	1.99	0.14
P7H	1.00	0.19	0.19
Ps	0.13	0.71	0.09
Pa	0.64	0.71	0.45

Copyright owned by S.G.B. Group p.l.c. Mitcham, Surrey. Reproduction or disclosure to third parties in any form whatsoever is not allowed without the written consent of the proprietors © Copyright S.G.B. Group p.l.c. 1987

1. Check Vertical reaction => Sum of Vertical loads
   = Wv = 30.22 kN which is less than the 74 kN Allowable => OK

2. Check Horizontal reaction => Sum of Moments = 25.05 kNm
   => 25.05 = 1.7 R => R = 14.74 kN which is less than the 31 kN Allowable
   => OK

3. Find Vertical reaction in Cantilever Support Arm, Vc
   Vc = 1.26 R = 1.26 (14.74) = 18.57 kN

4. Find Vertical reaction in Vertical Support Arm, Vv
   Vv = P3 + Vc = 2.31 + 18.57 = 20.88 kN

5. Check Bening Moment in top beam :- see Page 19.
   The Maximum bending moment occurs at a zero shear force position:-
   Moments about P4 : 30.22 x 0.33 + 8.11 (0.33 - 0.3) - 20.88 (0.33 - 0.19)
   = 7.08 kNm

   Moments about Vc : 5.66 (1.68 - 1.53) + 0.07 (1.99 - 1.53) + 1.0 (0.19)
   = 1.07 kNm

   The 7.08 kNm, maximum moment is less than the allowable bending moment of 10.8 kNm.

Copyright in bezit van S G B Group p l c Mitcham Surrey. Vermenigvuldiging of mededeling aan derden in welke vorm dan ook, is zonder schriftelijke toestemming van eigenaar niet geoorloofd.

Copyright est la propriete de S.G.B. Group p.l.c. Mitcham, Surrey. La reproduction ou la communication a des tiers, sous quelque forme que ce soit n'est permise qu'avec l'autorisation écrite du propriétaire.

Copyright ist Eigentum der S.G.B. Group p.l.c. Mitcham, Surrey. Vervielfältigung oder Bekanntgabe an Dritte, in welcher Form auch, ohne schriftliche Genehmigung der Eigentümerin nicht gestattet.

Copyright owned by S.G.B. Group p.l.c. Mitcham, Surrey. Reproduction or disclosure to third parties in any form whatsoever is not allowed without the written consent of the proprietors © Copyright S.G.B. Group p.l.c. 1987

SGB GROUP p.l.c.
WILLOW LANE MITCHAM
SURREY Tel. 01-648 3400

CLIMBING FORMWORK BRACKET

EXAMPLE

Ref No. J34
Page No. 19
Date. JUNE 1987

GROUP RESEARCH AND DEVELOPMENT DIVISION

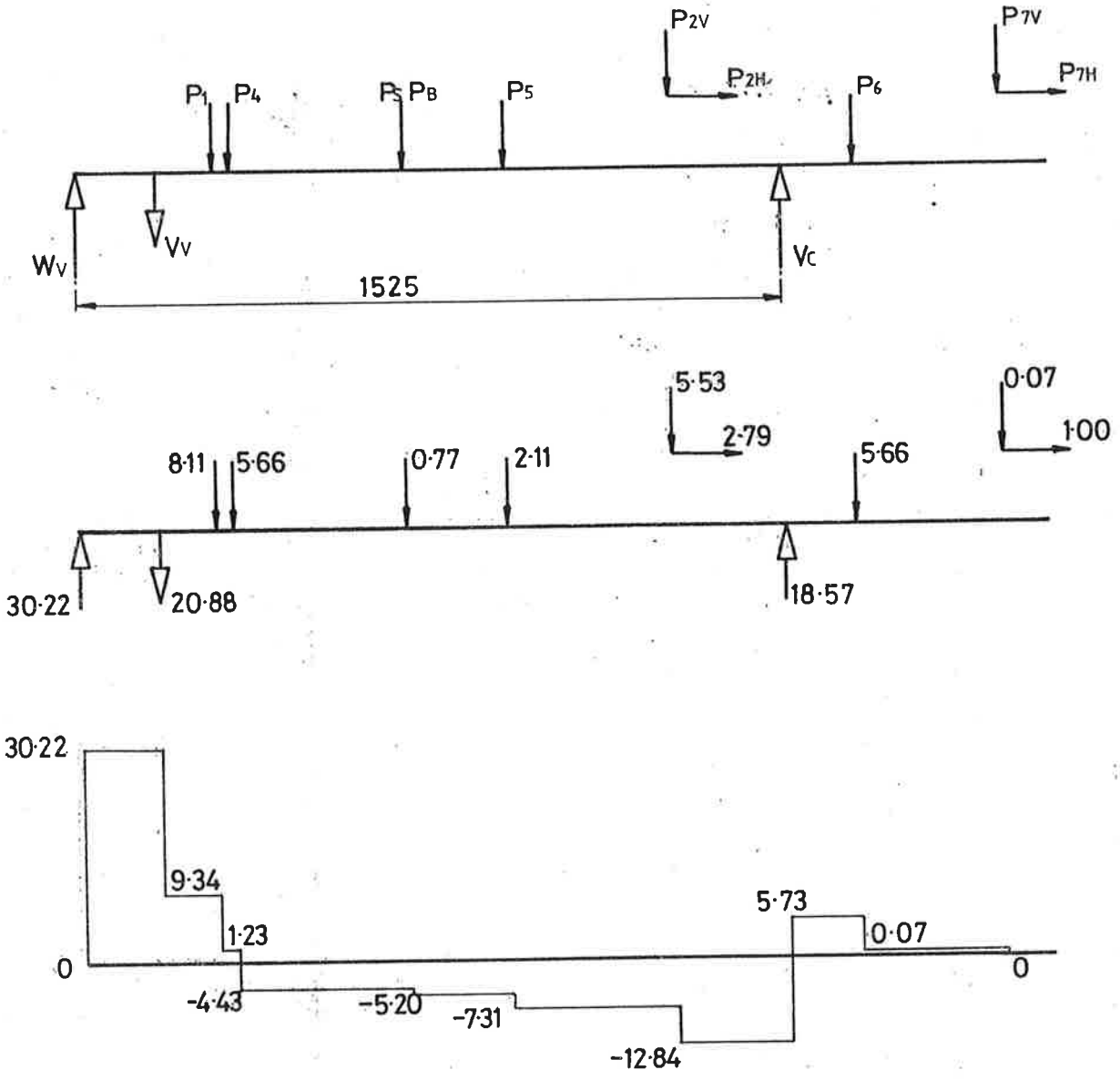

SHEAR FORCE DIAGRAM

Copyright in bezit van S.G.B. Group p.l.c. Mitcham, Surrey. Vermenigvuldiging of mededeling aan derden in welke vorm dan ook, is zonder schriftelijke toestemming van eigenares niet geoorloofd.

Copyright est la propriété de S.G.B. Group p.l.c. Mitcham, Surrey. La reproduction ou la communication à des tiers, sous quelque forme que ce soit n'est permise qu'avec l'autorisation écrite du propriétaire.

Copyright ist Eigentum der S.G.B. Group p.l.c. Mitcham, Surrey. Vervielfältigung oder Bekanntgabe an Dritte, in welcher Form auch, ohne schriftliche Genehmigung der Eigentumerin nicht gestattt.

Copyright owned by S.G.B. Group p.l.c. Mitcham, Surrey. Reproduction or disclosure to third parties in any form whatsoever is not allowed without the written consent of the proprietors © Copyright S.G.B. Group p.l.c. 1987

Page No.	DATA SHEET
1	COMPONENTS
2	EXAMPLES OF USE OF WALINGS
3	EXAMPLES OF USE OF WALINGS
4	SPACING OF WALINGS
5	DEFLECTIONS

Form auch, ohne schriftliche Genehmigung der Eigentümerin nicht gestattet.
l'autorisation écrite de la propriétaire.
eigenares niet geoorloofd.
proprietors.

SGB GROUP LIMITED

SGB STEEL WALINGS

Examples of use of Walings

WILLOW LANE
MITCHAM
SURREY
Tel 01-648-3400

Ref No. J15
Page No. 2
Date MAY '74

Page 1 shows that waling lengths can be made-up in multiples of 300mm. This enables any length of plain wall to be formed as shown in the sketch. The waling should be made long enough to allow the end shutter to be formed.

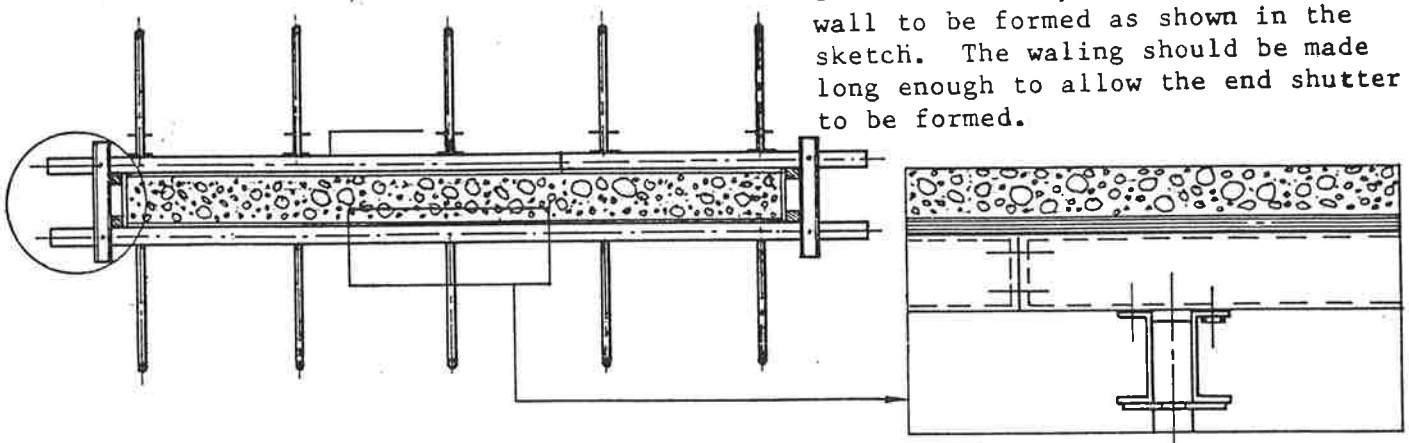

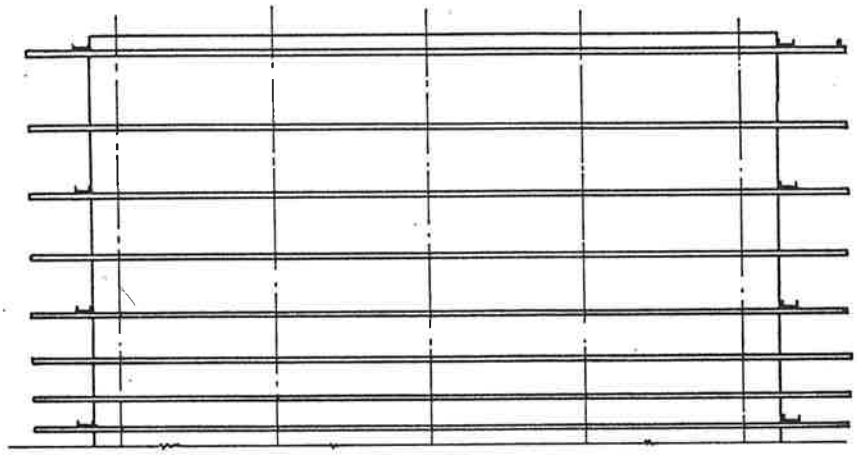

It is most economic to use walings in one length, if possible. If longer walings have to be made-up from several smaller lengths, it is recommended that the joints are staggered. The pattern of holes in walings allows the strongbacks to be spaced out at intervals which are multiples of 100mm. (see page 1). Joints at points of maximum bending moment should be avoided.

Moment of resistance of the joint of two walings butted end to end by two MI6 bolts is: 2.5 kNm.

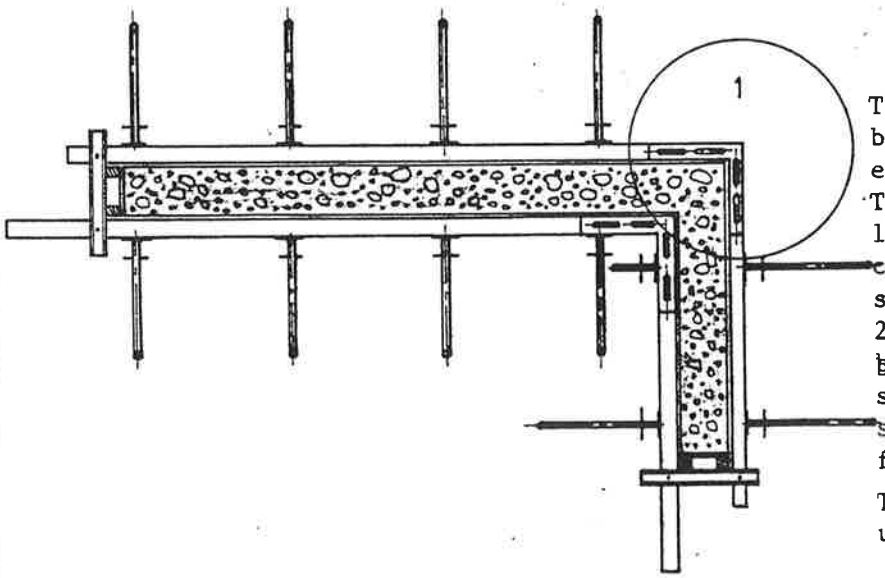

The corner waling with slots can be used to form internal and external corners to the shutter. There are three possible methods.
1. By joining the end of the corner waling to the end of the standard waling.
2&3. The corner waling can also be bolted back to back with the standard waling by the two methods shown. This method permits greater flexibility than method one.

The corner waling should only be used for alignment purposes.

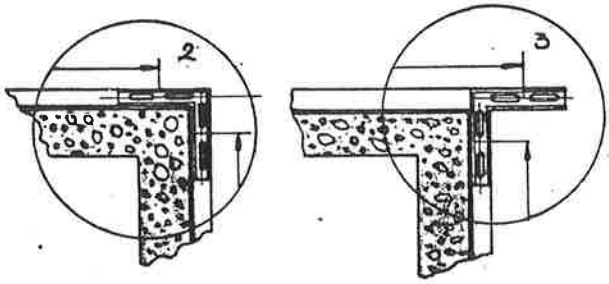

SGB GROUP LIMITED
WILLOW LANE
MITCHAM
SURREY
Tel 01 648 3400

SGB STEEL WALINGS

Examples of use of Walings

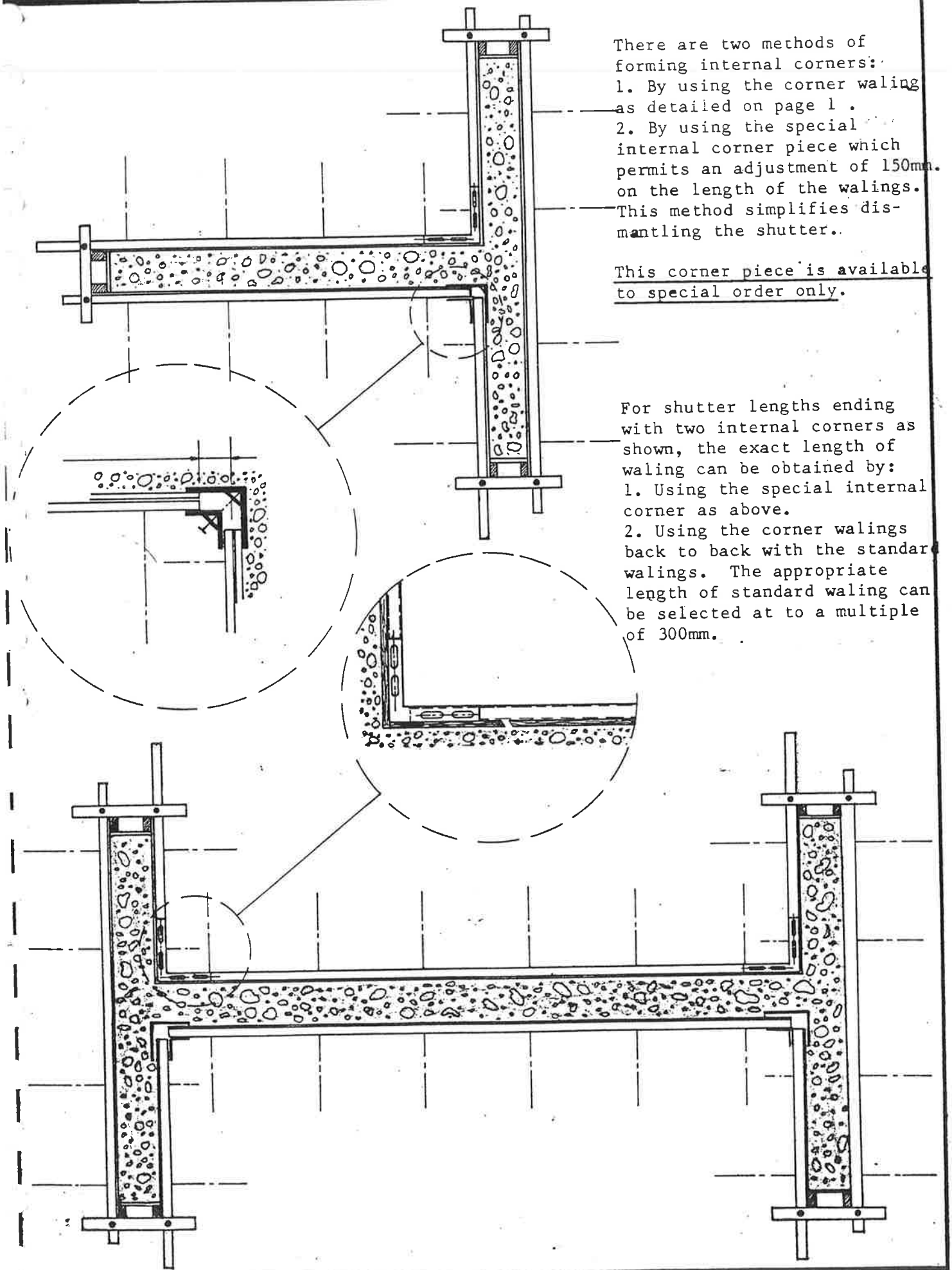

There are two methods of forming internal corners:
1. By using the corner waling as detailed on page 1 .
2. By using the special internal corner piece which permits an adjustment of 150mm. on the length of the walings. This method simplifies dismantling the shutter..

This corner piece is available to special order only.

For shutter lengths ending with two internal corners as shown, the exact length of waling can be obtained by:
1. Using the special internal corner as above.
2. Using the corner walings back to back with the standard walings. The appropriate length of standard waling can be selected at to a multiple of 300mm.

whatsoever, not allowed without written consent of the proprietors.
Form auch, ohne schriftliche Genehmigung der Eigentümerin nicht gestattet.
quelque forme que ce soit n'est permise qu'avec l'autorisation écrite de la propriétaire.
vorm daarvan, zonder schriftelijke toestemming van eigenares niet geoorloofd.

P = Local Concrete Pressure kN/m^2.

P kN/m^2	SPACING OF STRONGBACKS (m).														
	0.6	0.7	0.8	0.9	1.0	1.1	1.2	1.3	1.4	1.5	1.6	1.7	1.8	1.9	2.0
	CENTRES OF WALINGS (mm).														
20	-	-	-	-	-	-	935	797	687	598	526	465	415	373	336
30	-	-	-	-	897	742	623	531	458	398	350	310	277	249	224
40	-	-	-	831	673	556	467	398	343	299	263	232	207	186	168
50	-	-	841	665	538	445	374	318	274	239	210	186	166	149	134
60	-	915	701	554	449	371	312	265	229	199	175	155	138	-	-
70 *	-	785	601	474	384	312	267	227	196	171	150	133	-	-	-
80	935	687	526	415	336	278	234	199	172	149	131	-	-	-	-

Note:- (1) Spacings are for walings simply supported over strongbacks, and may be increased by up to 20% where walings are continuous over three or more strongbacks.

(2) Permissable span of plywood may be a limiting factor.

(3) In this table P is the total pressure acting in the region of the waling, including Impact Surcharge if allowed for.

SGB GROUP LIMITED

SGB STEEL WALINGS
SPACING OF WALINGS

WILLOW LANE
MITCHAM
SURREY
Tel: 01-648-3400

SPAN L (m)	SIMPLY SUPPORTED 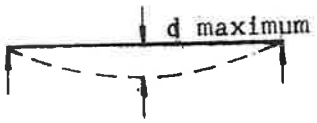	CONTINUOUS OVER 2 SPANS 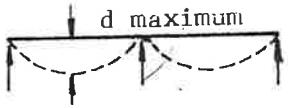	CONTINUOUS OVER 3 SPANS 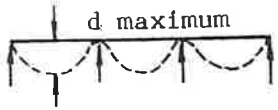
	MAXIMUM DEFLECTION d (mm)		
0.9	1.4	0.3	0.4
1.2	2.4	0.7	0.9
1.5	3.8	1.4	1.8
1.8	5.5	2.5	3.2
2.1	7.5	4.0	5.1

NOTES

1) The above deflections assume that the waling is fully stressed, i.e. developing its' maximum moment of resistance at the critical section. For other cases, adjust pro rata.

ISSUED BY SGB GROUP RESEARCH AND DEVELOPMENT DIVISION - MITCHAM, ENGLAND.

SGB GROUP LIMITED
WILLOW LANE
MITCHAM
SURREY
Tel 01-648-3400

SGB STEEL WALINGS
Deflections

Ref No. J15
Page No. 5
Date JULY 74.

SGB GROUP p.l.c.
WILLOW LANE MITCHAM
SURREY Tel. 01-648 3400

SGB PUSH-PULL PROPS

TELESCOPIC AND STANDARD PUSH-PULL PROP

Ref No. B5
Page No. 1
Date June 1984
GROUP RESEARCH AND DEVELOPMENT DIVISION

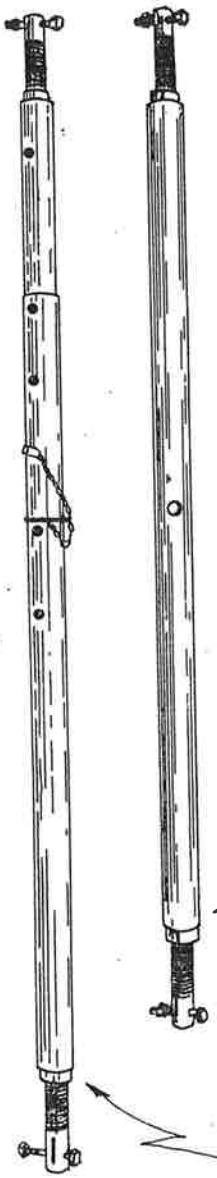



Base Plate

Weight: 1 kg
Code: 4233.01



Half Coupler Fitting

Weight: 1.1 kg
Code: 4233.04

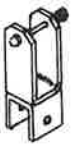

Metriform Panel Fitting

Weight: 0.86 kg
Code: 4233.05



Mk II Soldier
Std. P.P.P. Adaptor

Weight: 0.82kg
Code: 4233.06

Note: Both Push Pull Props fitted with M12 x 75 Bolt and Nylok Nut.

Standard Push Pull Prop

Manufactured to order in any length for sale only

Telescopic Push Pull Prop

Stock Size:- 2.1m closed Code: 4233.00
- 3.9m Extended (approximate lengths)
Any other size to order for sale only.

Axial loads

LENGTH OF PROP	SAFE WORKING LOADS Standard props 48.3mm TUBE DIAMETER	60.3mm TUBE DIAMETER	Telescopic Code 4233/00
m	kN	kN	kN
1.2	20.32	—	—
1.8	20.32	—	20.32
2.4	15.24	20.32	20.32
3.0	10.16	20.32	20.32
3.6	7.62	15.24	15.24
4.2	5.08	12.70	10.16
4.8	3.81	7.62	—
5.4	2.54	5.08	—

Copyright in ... van S.G. Group p.l.c. Mitcham, Surrey. Vermenigvuldiging of mededeling aan derden in welke vorm dan ook, is zonder schriftelijke toestemming van eigenares niet geoorloofd.
Copyright ... propriété de S.G. Group p.l.c. Mitcham, Surrey. La reproduction ou la communication à des tiers, sous quelque forme que ce soit n'est permise qu'avec l'autorisation écrite du propriétaire.
Copyright Eigentum S.G.B. Group p.l.c. Mitcham, Surrey. Vervielfältigung oder Bekanntgabe an Dritte, in welcher Form auch, ohne schriftliche Genehmigung der Eigentümerin nicht gestattet.
Copyright ... S.G. Group p.l.c. Mitcham, Surrey. Reproduction or disclosure to third parties in any form whatsoever is not allowed without the written consent of the proprietors. © Copyright S.G.B Group p.l.c. 19

Copyright in bezit van S.G.B. Group p.l.c. Mitcham, Surrey. Vermenigvuldiging of mededeling aan derden in welke vorm dan ook, is zonder schriftelijke toestemming van eigenaars niet geoorloofd.

Copyright est la propriété de S.G.B. Group p.l.c. Mitcham, Surrey. La reproduction ou la communication à des tiers, sous quelque forme que ce soit n'est permise qu'avec l'autorisation écrite du propriétaire.

Copyright ist Eigentum der S.G.B. Group p.l.c. Mitcham, Surrey. Vervielfältigung oder Bekanntgabe an Dritte, in welcher Form auch, ohne schriftliche Genehmigung der Eigentümerin nicht gestattet.

Copyright owned by S.G.B. Group p.l.c. Mitcham, Surrey. Reproduction or disclosure to third parties in any form whatsoever is not allowed without the written consent of the proprietors. ©Copyright S.G.B. Group p.l.c. 1986

S.G.B. GROUP p.l.c.
WILLOW LANE MITCHAM
SURREY Tel. 01-648 3400

25 KN GENERAL PURPOSE BRACKET - MK II

COMPONENTS

GROUP RESEARCH AND DEVELOPMENT DIVISION

25kN FIXED CLIMBING BRACKET

Weight: 30kg

Code: 4430.40

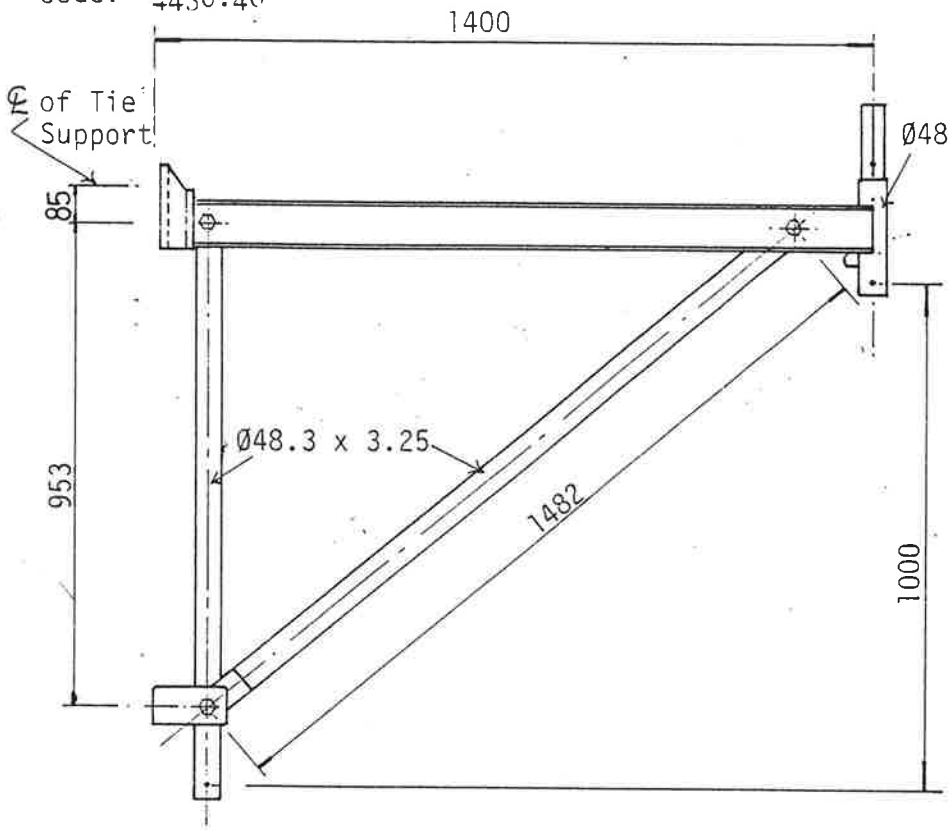

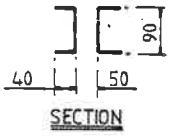

Assembly Bolts

2 No. M20 x 90
1 No. M20 x 110

(For other dimensions see Page **107**)

'U' BOLT

Weight: 1.0kg
Code: 4430.41

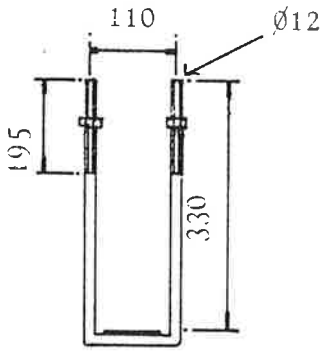

Used to secure timber beams of either 150 or 225 mm depth.
(See page 103)

'U' BOLT PLATE

Weight: 0.4kg
Code: 4430.42

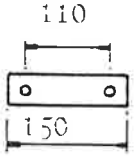

For use with 'U' bolt on hanging scaffold.
(See page 103)

TIE ADAPTOR PIECE

Weight: 0.2kg
Code: 4430.43

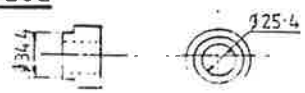

For use at tie-in point with Williamsform 1" diameter She Bolt or M24 Bolt in RMD anchor screw.

SGB GROUP p.l.c.
WILLOW LANE MITCHAM
SURREY Tel. 01-648 3400

25 KN GENERAL PURPOSE BRACKET MK II

ERECTION DETAILS

Ref No. 04
Page No. 103
Date JANUARY 1987

GROUP RESEARCH AND DEVELOPMENT DIVISION

Copyright in bezit van S.G.B. Group p.l.c. Mitcham, Surrey. Vermenigvuldiging of mededeling aan derden in welke vorm dan ook, is zonder schriftelijke toestemming van eigenares niet toegestaan.

Copyright est la propriété de S.G.B. Group p.l.c. Mitcham, Surrey. La reproduction ou la communication à des tiers, sous quelque forme que ce soit n'est permise qu'avec l'autorisation écrite du propriétaire.

Copyright ist Eigentum der S.G.B. Group p.l.c. Mitcham, Surrey. Vervielfältigung oder Bekanntgabe an Dritte, in welcher Form auch, ohne schriftliche Genehmigung der Eigentümerin nicht gestatt.

Published by S.G.B. Group p.l.c. Mitcham, Surrey. Copyright or disclosure to third parties in any form is not allowed without the written consent of the S.G.B. Group p.l.c. 1986

PLAN SHOWING EXTERNAL CORNER DETAIL

(Decking and formwork omitted for clarity)

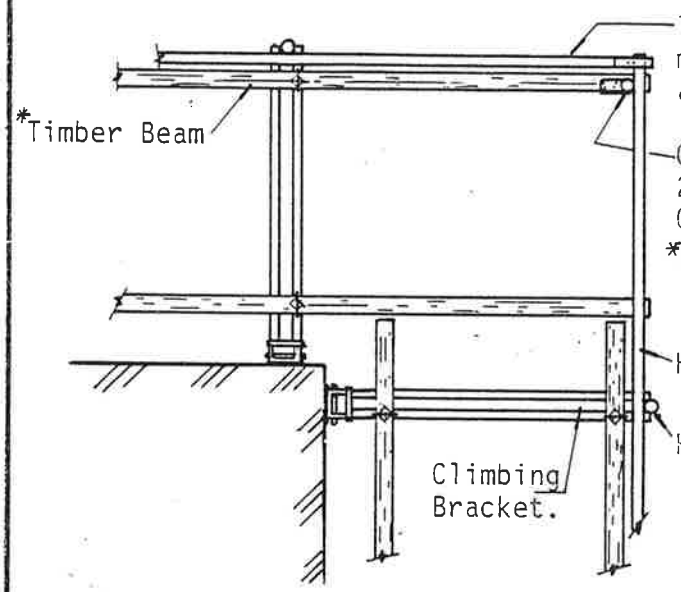

USE OF 'U' BOLTS

On Climbing Bracket

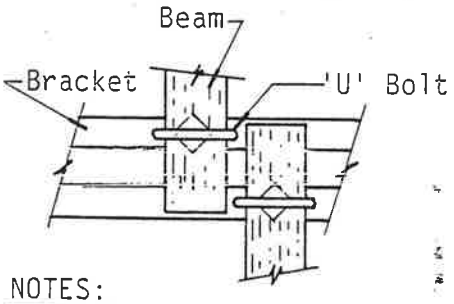

On Tubular Transom

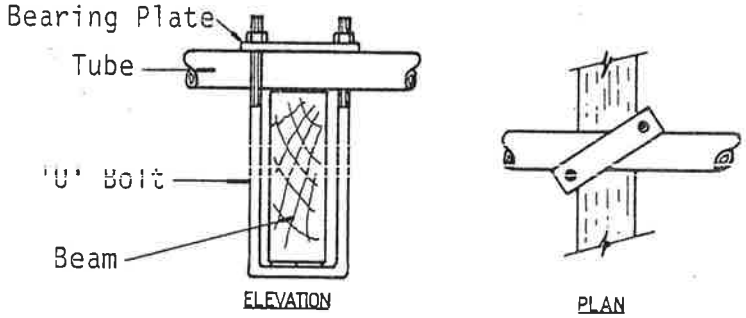

NOTES:

1. Beam under 'U' Bolt mounted nearest to handrail post is preferred, to achieve the smaller angle on the prop.
2. When the beams next to handrail are lapped, the prop must be attached to the Ø13 hole 370 mm from the ℄ of the handrail on the climbing bracket, to prevent fouling.
3. For lapping of beams under the shutter, short lengths may be needed to ensure non-eccentric loading of beam.
4. The width of 'U' Bolts have enough 'free play' to facilitate a "circular shape" on the decking and formwork, if required.

HANGING SCAFFOLD DETAIL

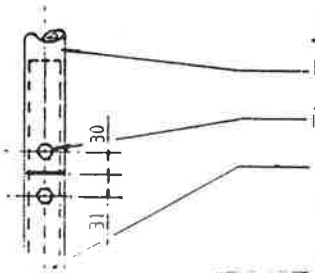

Upright from Climbing Bracket

M10 x 70 Black Bolt and Nut fitted through Ø11 Holes.

Loose Cuplok Spigot 300mm long
Code No: D14/100203

Copyright in bezit van S G B Group p l c Mitcham, Surrey
Vermenigvuldiging of mededeling aan derden in welke vorm dan ook, is zonder schriftelijke toestemming van eigenares niet geoorloofd

Copyright est la propriété de S.G.B. Group p.l.c. Mitcham, Surrey. La reproduction ou la communication à des tiers, sous quelque forme que ce soit n'est permise qu'avec l'autorisation écrite du propriétaire.

Copyright ist Eigentum der S G B Group p.l.c. Mitcham, Surrey
Vervielfältigung oder Bekanntgabe an Dritte, in welcher Form auch ohne schriftliche Genehmigung der Eigentümerin nicht gestattet.

© S G B Group p l c 1987

3. WILLIAMSFORM TIE SYSTEM

(See notes at top of page 104)

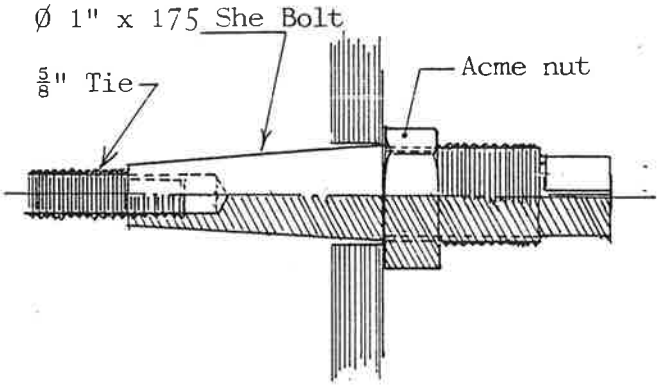

FORMWORK

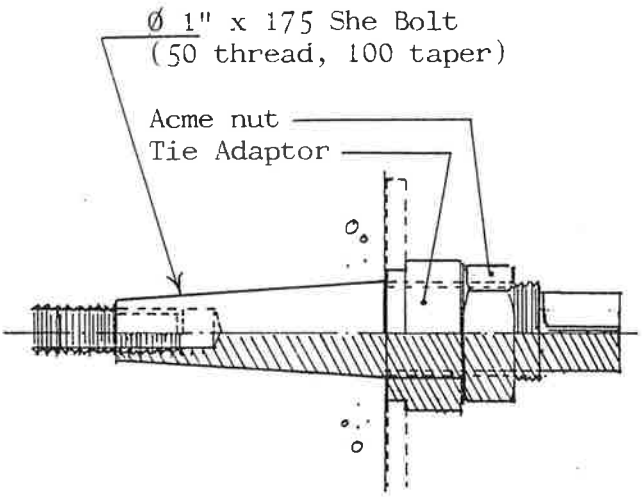

BRACKET SUPPORT

0224 494 353

Copyright in bezit van S.G.B. Group p.l.c. Mitcham, Surrey. Vermenigvuldiging of mededeling aan derden in welke vorm dan ook, is zonder schriftelijke toestemming van eigenaar. niet goedgekeurd.

Copyright est la propriété du S.G.B. Group p.l.c. Mitcham, Surrey. La reproduction ou la communication à des tiers, sous quelque forme que ce soit n'est permise qu'avec l'autorisation écrite du propriétaire.

Copyright ist Eigentum der S.G.B. Group p.l.c. Mitcham, Surrey. Vervielfältigung oder Bekanntgabe an Dritte, in welcher Form auch, ohne schriftliche Genehmigung der Eigentümerin nicht gestattet.

Copyright owned by S.G.B. Group p.l.c. Mitcham, Surrey. Reproduction or disclosure to third parties in any form whatsoever is not allowed without the written consent of the proprietors ©Copyright S.G.B. Group p.l.c. 1986

WIND LOADING

In certain cases, before the concrete is poured, the shuttering self weight is light enough to be adversely affected by wind loading.

This wind loading should be calculated for the particular case (i.e. spacing of brackets, height of shutter, height above ground. etc) and adequate restraints against movement at base of shutter and uplift of climbing bracket effected (see page 102).

The allowable axial load in the push pull prop (or similar alignment props) is proportional to its extension and this should be checked with the wind forces being transferred from the shutter face.

MAXIMUM ALLOWABLE REACTIONS

Allowable Bending Moment in top beam = 5.7kNm

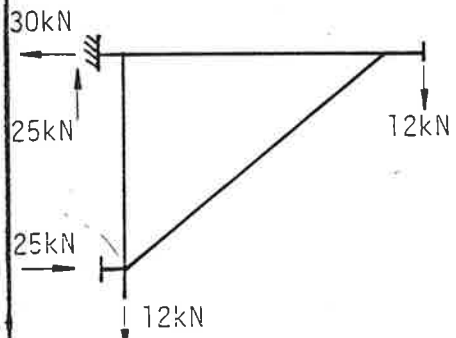

NOTE: The difference between the two allowable horizontal reactions is due to the extra pull out force exerted on the tie in point by wind loading on the shutter.

LOADS TO BE CONSIDERED

P1: Shuttering and hop up on same (dead + live loads). Reaction from Deck loading and self weight.

P2: Vertical reaction of force in alignment prop from wind loading. (Note: Once both sides of the shutter are erected, this force will be zero, though as a safety measure P2 should be taken as not less than 10% of P1).

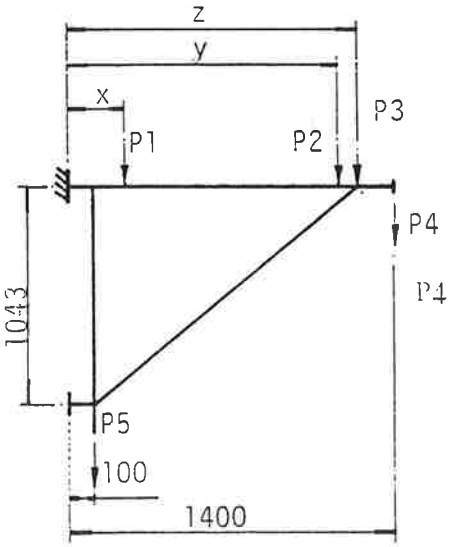

P3: Reaction From Deck Loading and self weight.

P4 & P5: Loads from hanging scaffold (dead + live loads), (maximum of 12KN)

x = distance to centre line of beam under shutter soldier.

y = distance to alignment prop base connection point 1140 or 1030 for push pull prop type .

z = distance to centre line of beam under decking and handrail 1245 or 1135.

Taking moments about tie-in point ensure that the bearing point reaction of 25 kN is not exceeded and also check other reactions and bending moment as listed above.

SGB GROUP p.l.c.
WILLOW LANE MITCHAM
SURREY Tel. 01-648 3400

25 KN GENERAL PURPOSE
BRACKET - MK II

TYING-IN DETAILS

GROUP RESEARCH AND DEVELOPMENT DIVISION

MINIMUM CONCRETE STRENGTH FOR ALL TYPES = 21 N/mm^2
Minimum pull out value for any of the tying-in systems must be at least 30 KN with an adequate safety factor and is the responsibility of the Contractor.

1. DYWIDAG FORM TIE SYSTEM

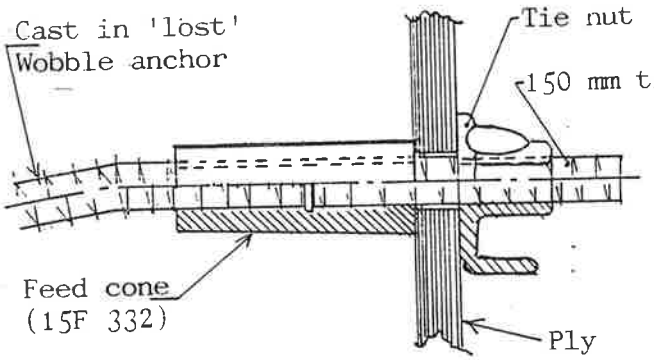

FORMWORK

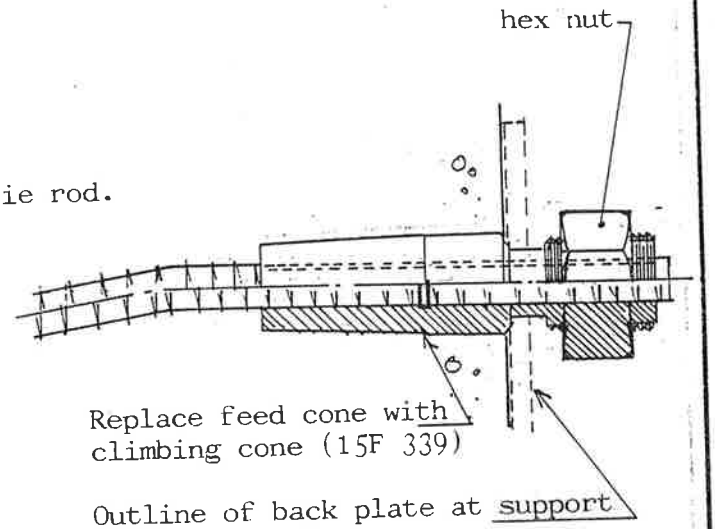

BRACKET SUPPORT

2. RMD ANCHOR SCREW

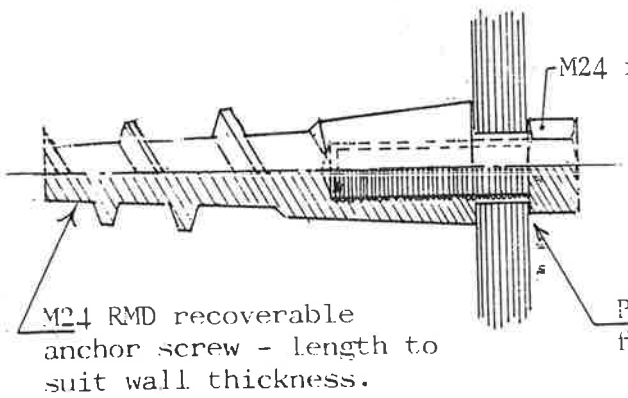

FORMWORK

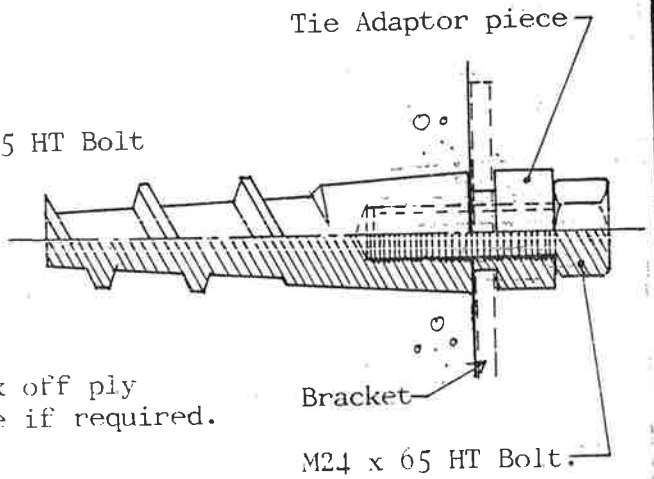

BRACKET SUPPORT

Copyright in Sezit van S.G.B. Group p.l.c. Mitcham, Surrey. Vermenigvuldiging of mededeling aan derden in welke vorm dan ook is zonder schriftelijke toestemming van eigenares niet geoorloofd.
Copyright est la propriété de S.G.B. Group p.l.c. Mitcham, Surrey. La reproduction ou la communication à des tiers, sous quelque forme que ce soit n'est permise qu'avec l'autorisation écrite du propriétaire.
Copyright ist Eigentum der S.G.B. Group p.l.c. Mitcham, Surrey. Vervielfältigung oder Bekanntgabe an Dritte, in welcher Form auch ohne schriftliche Genehmigung der Eigentümerin nicht gestattet.
© S.G.B. Group p.l.c. 1987

SGB GROUP p.l.c.
WILLOW LANE MITCHAM
SURREY Tel. 01-648 3400

25 KN GENERAL PURPOSE
BRACKET MK II

DIMENSIONS OF BRACKET

Ref No. 04
Page No. 107
Date JANUARY 1987

GROUP RESEARCH AND DEVELOPMENT DIVISION

DIMENSIONAL LAYOUT OF BRACKET

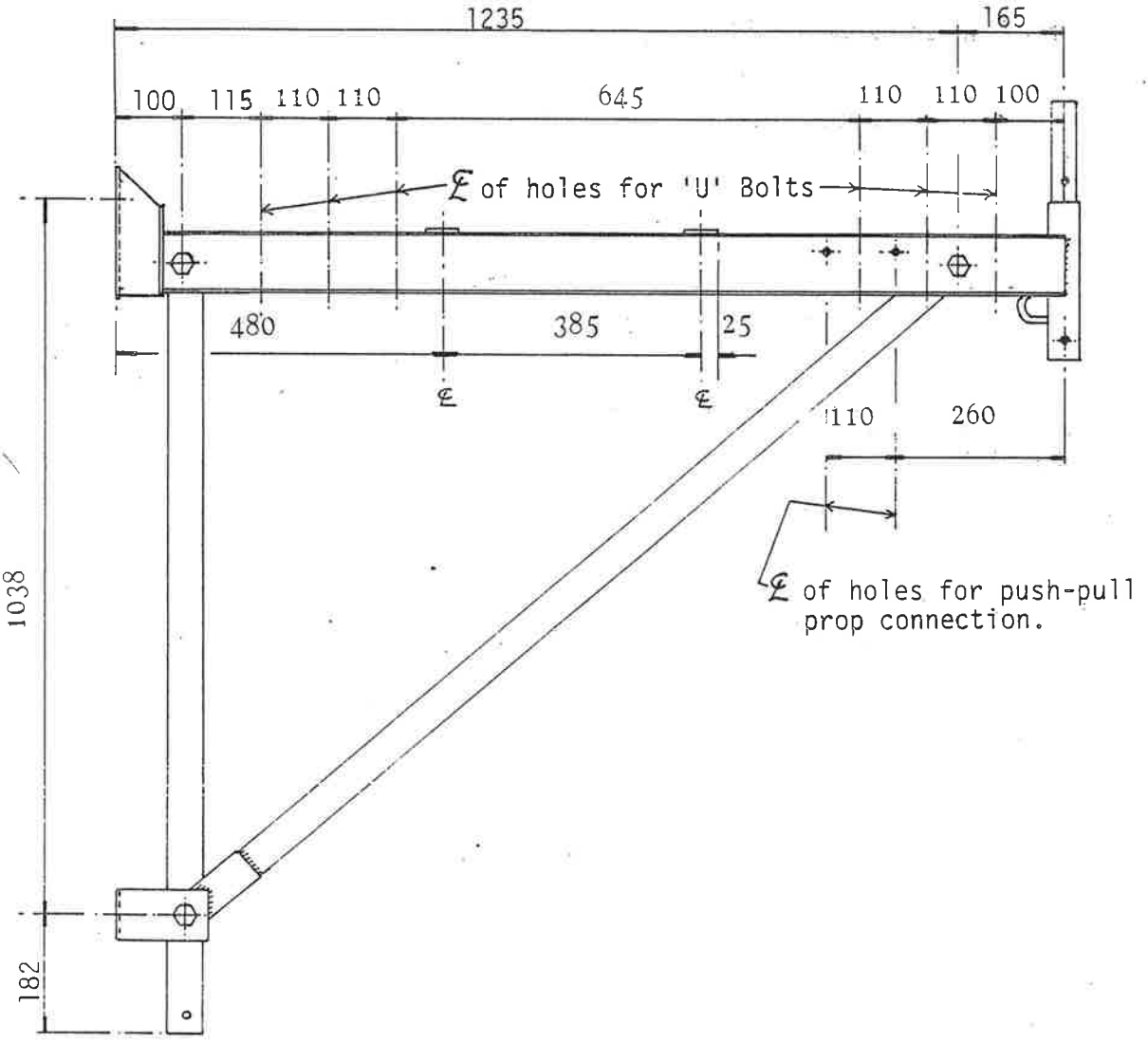

Copyright owned by S.G.B. Group p.l.c. Mitcham, Surrey. Reproduction or disclosure to third parties in any form whatsoever is not allowed without the written consent of the proprietors © Copyright S.G.B. Group p.l.c. 1986

Copyright ist Eigentum der S.G.B. Group p.l.c. Mitcham, Surrey. Vervielfältigung oder Bekanntgabe an Dritte, in welcher Form auch, ohne schriftliche Genehmigung der Eigentümerin nicht gestattet.

Copyright est la propriété de S.G.B. Group p.l.c. Mitcham, Surrey. La reproduction ou la communication à des tiers, sous quelque forme que ce soit n'est permise qu'avec l'autorisation écrite du propriétaire.

Copyright in bezit van S.G.B. Group p.l.c. Mitcham, Surrey. Vermenigvuldiging of mededeling aan derden in welke vorm dan ook, is zonder schriftelijke toestemming van eigenaar niet geoorloofd.

Copyright in bezit van S G B Group p.l.c. Mitcham, Surrey. Vermenigvuldiging of mededeling aan derden in welke vorm dan ook, is zonder schriftelijke toestemming van eigenaar niet geoorloofd.

Copyright est la propriété de S.G.B. Group p.l.c. Mitcham, Surrey. La reproduction ou la communication à des tiers, sous quelque forme que ce soit n'est permise qu'avec l'autorisation écrite du propriétaire.

Copyright ist Eigentum der S.G.B. Group p.l.c. Mitcham, Surrey. Vervielfältigung oder Bekanntgabe an Dritte, in welcher Form auch, ohne schriftliche Genehmigung der Eigentümerin nicht gestattet.

Copyright owned by S G B Group p.l.c. Mitcham, Surrey. Reproduction or disclosure to third parties in any form whatsoever is not allowed without the written consent of the proprietors ©Copyright S G B Group p.l.c. 1986

Taking a 2.7m high shutter at 30m above ground level with DU-AL secondaries as walings and Mk II soldiers (see diagramatic set up on Page 102). Try brackets spaced at 1.8m to suit Cuplok ledgers.

WIND LOADING ON SHUTTER

From CP3: CH. V: Pt.2: 1972, taking Class 3B and 30m above ground level and a wind speed of 46 m/s.

$S1 = 1, \quad S2 = 0.97, \quad S3 = 0.77$

Design wind speed $Vs = S1\ S2\ S3\ V$
$= (1)\ (0.97)\ (0.77)\ (46)$
$= 34.4$ m/s

Design wind pressure, $q = 0.613\ (Vs)^2$
$= 723.6\ N/m^2$

Load/mm over height of shutter when brackets spaced at 1.8m

$= (723.6)\ (1.8)$
$= 1302.5$ N/m
$= 1.3$ N/mm

To find reactions at base of soldier and in alignment prop due to wind loading:

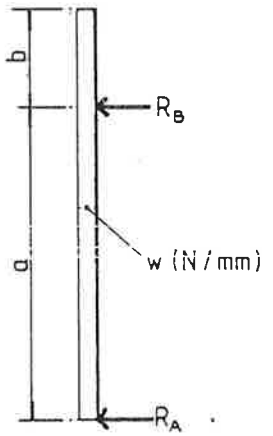

Assume base of soldier is simply supported and for general case shown

$$R_A = \frac{w}{2a}\ (a^2 - b^2)$$

and $R_B = w(a+b) - R_A$

Reaction at base of soldier where a = 2025 and b = 675

$$\Rightarrow R_A = \frac{1.3}{2(2025)}\ [\ (2025)^2 - (675)^2\ ]$$

$R_A = 1170$N,
$R_B = 1.3\ (2700) - 1170 = 2340$N
= Horizontal reaction on prop

$\Rightarrow$ Vertical reaction from prop on Climbing Bracket - 150 mm form jack extension.
Prop angle, $\theta = \tan^{-1} 2175/1140 \quad \Rightarrow \theta = 62.3°$.

$\Rightarrow$ Vertical reaction = $2340 \text{ Tan } 62.3° = 4457\text{N} = \underline{4.5\text{KN}}$
Half self weight of push pull prop = $(25.4)\ (0.5)\ (9.81) = \underline{125\text{N}}$
$\Rightarrow$ Total Reaction = $4582\text{N} = \underline{4.6\text{KN}}$
which is reaction P2 as shown on page 106

DEAD + LIVE LOADING FROM SHUTTER

PLY

For 19mm ply, weight = 13.3 kg/m²
Area/Bracket = $(1.8)\ (2.7) = 4.86\ m^2$
$\Rightarrow$ Load from ply = $(13.3)\ (4.86)\ (9.81) = \underline{634\ \text{N}}$

Copyright in bezit van S.G.B. Group p.l.c. Mitcham, Surrey. Vermenigvuldiging of mededeling aan derden in welke vorm dan ook, is zonder schriftelijke toestemming van eigenaar niet geoorloofd.

Copyright est la propriété de S.G.B. Group p.l.c. Mitcham, Surrey. La reproduction ou la communication à des tiers, sous quelque forme que ce soit n'est permise qu'avec l'autorisation écrite du propriétaire.

Copyright ist Eigentum der S.G.B. Group p.l.c. Mitcham, Surrey. Vervielfältigung oder Bekanntgabe an Dritte, in welcher Form auch, ohne schriftliche Genehmigung der Eigentümerin nicht gestattet.

Copyright S.G.B. Group p.l.c. Mitcham, Surrey. Reproduction or transfer to third parties in any form whatsoever is prohibited without the written consent of the S.G.B. Group p.l.c. 1986

WALINGS

For DU-AL secondaries, 8 No. in height
Weight/m (including timber insert) = 4.04 kg/m
⇒ Load from secondaries = 8 (1.8) (4.04) (9.81) = 571N

SOLDIERS

For Mk II Steel Soldiers, spaced at 1.8m (in accordance with data sheets J29), 2.7m soldier = 54.2 kg = 532N

Hop Up on soldier = 5.6kg = 55N

4 No. Boards on Hop Up at 600 kg/m^3
= (600) (0.038) (0.225) (4) (1.8) (9.81) = 362 N

Handrail post and handrail on Hop Up with tube at 4.4 kg/m
= (1.2 + 1.8) 4.4 = 13.2kg = 129N

Push Pull Prop = (25.4) (9.81) = 249N
putting half down shutter self weight = 125N

Form Jack = 4.9kg = 48N

TOTAL DEAD WEIGHT OF SHUTTER
= 634 + 571 + 532 + 55 + 362+ 129 + 125 + 48 = 2456N
+ 15% for ancillaries and lapping of walings = 2824N

Live load on soldier hop-up at 0.75 kN/m^2

= (750) (0.715) (1.8)
= 965 N

Therefore total reaction from shutter etc. as detailed above is
= 2824 + 965 = 3789N = 3.8KN
which is part of reaction P1 as shown on page 106

BRACKET

For 225 x 75mm Timber beams and 38mm thick scaffold boards.

Distance into ℄ of soldier = 19 + 150 + (225) (0.5) = 281.5mm
but due to 'U' bolts maximum distance to ℄ of beam = 100 + 115 + (110-(37.5 + 6))
= 281.5 mm

Width of boards per timber beam: (See page 107)
Inside: (645) (0.5) + (110) (2) = 542.5 = 543 mm
Outside: (645) (0.5) + (110) (2) + 75 = 617.5 = 618 mm

Copyright in bezit van S.G.B. Group p.l.c. Mitcham, Surrey. Vermenigvuldiging of mededeling aan derden in welke vorm dan ook, is zonder schriftelijke toestemming van eigenaars niet geoorloofd.

Copyright est la propriété de S.G.B. Group p.l.c. Mitcham, Surrey. La reproduction ou la communication à des tiers, sous quelque forme que ce soit n'est permise qu'avec l'autorisation écrite du propriétaire.

Copyright ist Eigentum der S.G.B. Group p.l.c. Mitcham, Surrey. Vervielfältigung oder Bekanntgabe an Dritte, in welcher Form auch, ohne schriftliche Genehmigung der Eigentümerin nicht gestattet.

Copyright S.G.B. Group p.l.c. Mitcham, Surrey. Reproduction or disclosure to third parties in any form whatsoever is not allowed without the written consent of the copyright owner S.G.B. Group p.l.c. 1986

REACTION UNDER SOLDIER

Taking timber density of 600kg/m³

Dead weight

Beam = (225) (75) (10^{-6}) (600) (9.81) (1.8) = 179N

Boards = (543) (38) (10^{-6}) (600) (9.81) (1.8) = 219N

Live Load at 1.5kN/m² (assumes acting to ℄ of soldier)

= (1500) 0.543 (1.8)
= 1466N

Half-self weight of Bracket = 30 x 0.5 = 15kg = 147N

Total reaction from bracket at P1 as shown on page 106

= 179 + 219 + 1466 + 147 = 2011N = 2KN

Total reaction P1 = 2 + 3.8 = 5.8KN
(For 3.8KN value see Page 109)

REACTION UNDER BEAM NEXT TO HANDRAIL

Dead-weight (see calculations for reaction under soldier above)

Beam = 179 N

Boards + Toeboards = (618 + 225) (38) (10^{-6}) (600) (9.81) (1.8) = 339N

Live load at 1.5 kN/m² = (1500) (0.618) (1.8) = 1669N

Half self weight of bracket = 147N

Handrail Post + Handrail
1.8m standard = 9.1 kg
2 No. 1.8m ledgers = 6.9 x 2 = 13.8kg
Total = (22.9) (9.81) = 225N
+ 5% for ancillaries = 236N

Total reaction P3 (as shown on page 106)

= 179 + 339 + 1669 + 147 + 236 = 2570N = 2.6KN

HANGING SCAFFOLD LOADS

Taking timber density of 600kg/m³ + using 150 x 75 timber beams.

Beam = (150) (75) (10^{-6}) (600) (9.81) (1.8) = 119N
With decking of 38mm thick boards
Inside reaction = 38 (10^{-3}) (0.65) (600) (9.81) (1.8) = 262N
Outside reaction (includes toeboard)
= (38) (10^{-3}) (0.65 + 0.225) (600) (9.81) (1.8) = 352N

5. Uplift due to wind

Required strength of tying back mechanism to outside edge of Climbing Bracket.
Vertical reaction at base of prop due to wind loading on shutter is 4.5kN as shown on page 108.
This force can be in either direction (up or down) depending on wind direction.
The tying back mechanism should be effective to this value (4.5kN) as any other uplift forces caused by wind loading on other sections of the scaffold will be countered by its self weight.

Copyright owned by S.G.B. Group p.l.c. Mitcham, Surrey. Reproduction or disclosure to third parties in any form whatsoever is not allowed without the written consent of the proprietors. © Copyright S.G.B. Group p.l.c. 1986